zencontrol

LED pwm dimmer **zc-pwm-iot-4ch-10a**

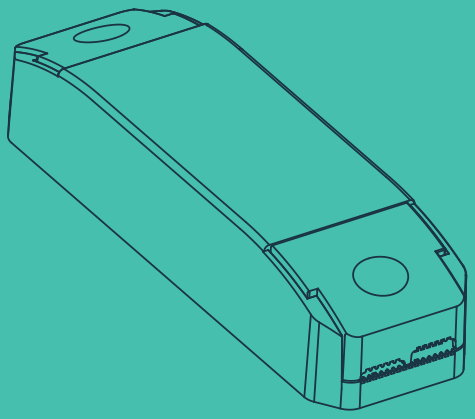

Dimensions

Mounting options	Independent control gear / surface mount
Fixing centres	125 mm
Dimensions	148 / 44.5 / 30 mm

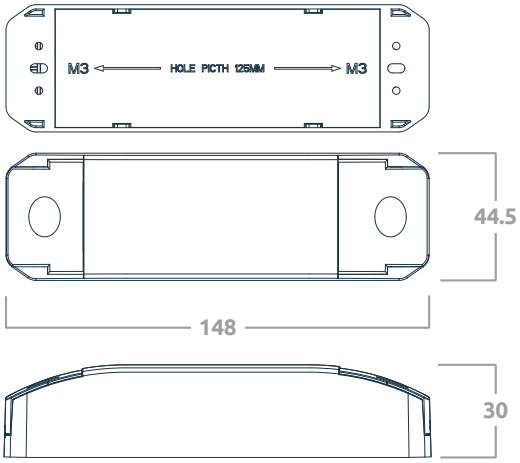

Product range

Order code	Description
zc-pwm-iot-4ch-10a	LED pwm dimmer, field mount

Specifications

Supply voltage	12 - 24 Vdc
Self consumption	150mW
Control system	**Wired** DALI-2 **Wireless** IEC62386-104 over Thread
Radio support	IEEE 802.15.4
Frequency band	2.4 GHz
Max radio tx power	+8 dBm
DALI line current	2 mA
Output load	10A total 0-10A per channel
Output load type	LED only
Independent channels	4
Bus unit configurations	4 x DT6, 2 x DT8-TC, DT8-RGBW *(see bus unit configuration table)*
Wiring	1 - 4 mm² Strip 6 - 7 mm
Operating temperature	0 to 55°C
Material	PC
Classification	Class II
Ingress protection	IP20

Safety information

- This product must only be installed by a licensed electrician.
- Before commencing installation turn off and isolate the electrical supply.
- There are no user serviceable parts, attempting to service any part of the product will void the warranty
- DALI is not SELV and as such should be treated as LV.
- As the installer, it is your responsibility to ensure you comply to all relevant building and safety codes. Refer to applicable standards for the relevant rules.

Installation

Remove the product from the box and inspect it for any damage. If you believe the product to be damaged or otherwise unsound, ***do not*** install the product. Please pack it back into its box and return it to the place of purchase for replacement.

If the product is satisfactory, proceed with the installation:

1. Ensure safety warnings are adhered to.
2. Release the two end covers using a flatblade screwdriver ***fig 1***.
3. Mount device, ***fig 2*** ,and wire as per the wiring diagram in ***fig 3.***
4. Replace end covers to ensure adequate strain relief.

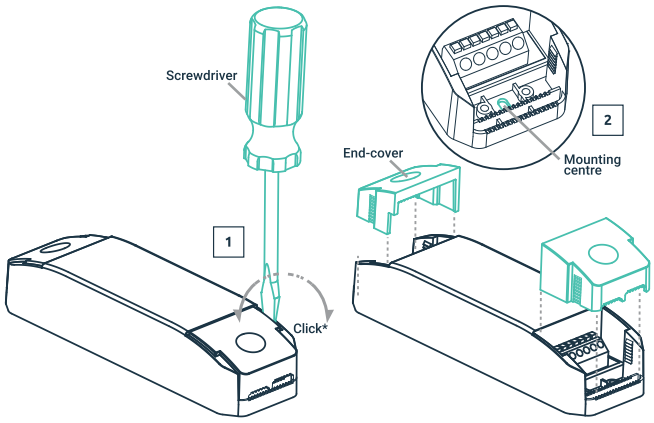

Wiring diagram

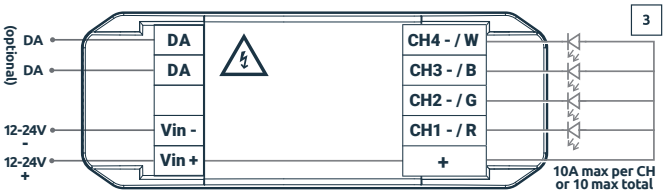

Wire preparation

1 - 4 mm²

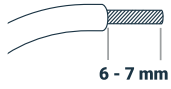

System overview: modes

1 **104 mode** is enabled after the device has been added to a 104 application controller such as zc-iot-fc.

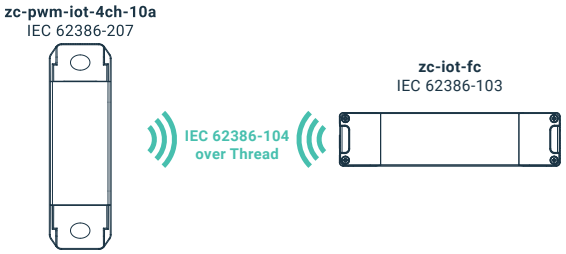

2 **104 + 101** Bridge mode is enabled after the device has been added to a 104 controller and a 101 power supply has been connected to the DALI terminals.

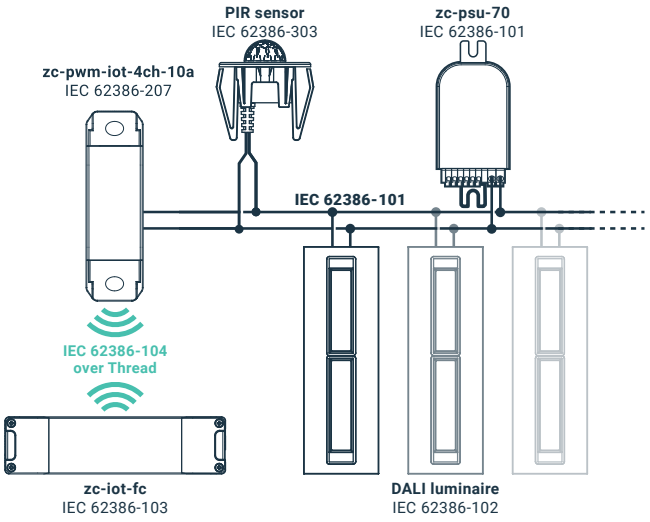

3 **101 mode** is enabled after a 101 power supply has been connected to the DALI terminal and the device **has not** been added to a 104 application controller.

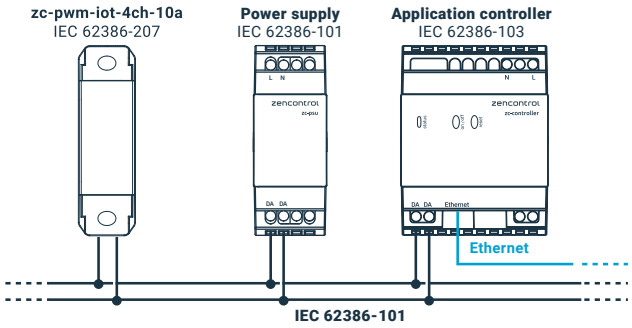

Bus unit configurations

Bus unit config.	No. of ECG	Channel 1	Channel 2	Channel 3	Channel 4
192 (default)	4	ECG index 0 DT6 (LED)	ECG index 1 DT6 (LED)	ECG index 2 DT6 (LED)	ECG index 3 DT6 (LED)
193	2	ECG index 0 DT8-TC (cool)	ECG index 0 DT8-TC (warm)	ECG index 1 DT8-TC (cool)	ECG index 1 DT8-TC (warm)
194	1	ECG index 0 DT8-RGBW (red)	ECG index 0 DT8-RGBW (green)	ECG index 0 DT8-RGBW (blue)	ECG index 0 DT8-RGBW (white)

Note: Bus unit configuration RGBW can be set using the zencontrol commissioning application. See support.zencontrol.com for more information.

Notice

For more information on compliant software see our website **zencontrol.com**

0553264_V1.2
Last updated 12/01/23
Information is subject to change without notice, E&OE

© zencontrol