4-Channel DALI relay controller **zc-relay-4-pro**

zencontrol

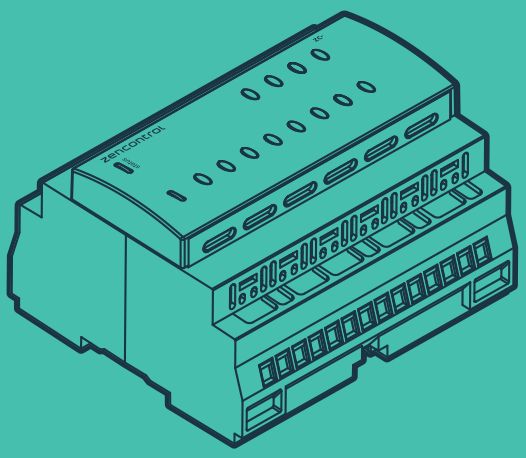

Product range

Order code	Description
zc-relay-4-pro	4-Channel DALI Pro relay controller, with 8 x 0-10V
zc-relay-2d2s-pro	4-Channel DALI Pro relay controller, 2 x SPST + 2 x SPDT with 8 x 0-10V

Specifications

Supply voltage	220 - 240 V ~ 50 Hz	
Control system	**Wired** DALI-2 **Wireless** IEC62386-104 over Thread	
Radio support	IEEE 802.15.4	
Frequency band	2.4 GHz	
DALI line current	2 mA	
Relay type	**zc-relay-4-pro**	4 x SPST
	zc-relay-2d2s-pro	2 x SPST 2 x SPDT
Output type	8 x 0-10V 4 x dry-contract volt-free relay	
Output load AC	10 A resistive ☼ 6 A inductive	
Max inrush (SPST only)	165 A 20 ms 492 A 1.5 ms	
Output voltage rating AC	0 - 240 V ~ 50 Hz	
Output load rating DC	0 - 25 V 3 A resistive ☼ 25 - 240 V 200 mA resistive ☼	
Min. rated relay operations	12 000	
Max. operations per hour	360	
Wiring	1 - 4 mm^2 Strip 6 - 7 mm	
Operating temperature	0 to 45°C	
Operating humidity	0 to 85 %	
Material	PC	
Classification	Class II	
0-10V output current	5mA max sink / source per channel	

Dimensions

Mounting options	DIN rail (35 mm)
Dimensions	92.5 / 106 / 62 mm

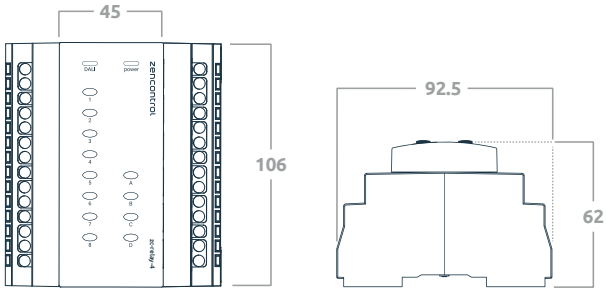

Installation

Remove the product from the box and inspect it for any damage. If you believe the product to be damaged or otherwise unsound, ***do not*** install the product. Please pack it back into its box and return it to the place of purchase for replacement.

If the product is satisfactory, proceed with the installation:

1. Ensure safety warnings are adhered to.
2. Mount the zc-relay-4-pro on DIN rail inside a mains rated enclosure as shown in ***fig 1***. To remove from DIN rail, release the clip mechanism with a flat blade screw driver, as per ***fig 2***.
3. Wire the zc-relay-4-pro as per ***wiring diagram***, overleaf.

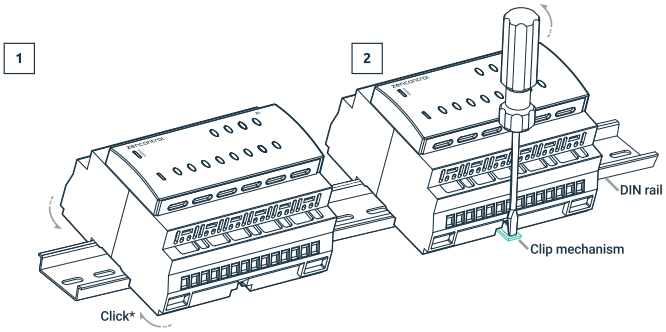

Safety information

- This product must only be installed by a licensed electrician.
- Before commencing installation turn off and isolate the electrical supply.
- There are no user serviceable parts, attempting to service any part of the product will void the warranty
- DALI is not SELV and as such should be treated as LV.
- As the installer, it is your responsibility to ensure you comply to all relevant building and safety codes. Refer to applicable standards for the relevant rules.
- When the installation is complete, leave this manual with the building's owner for future reference.

Relay button actions

Button	Action	Function
A	Hold	Relay 1 state off override
B	Hold	Relay 2 state off override
C	Hold	Relay 3 state off override
D	Hold	Relay 4 state off override
1 and 2	Hold 5+ sec	Physically select relay 1
	Hold 10+ sec	Physically select relay 1 and toggle relay state
3 and 4	Hold 5+ sec	Physically select relay 2
	Hold 10+ sec	Physically select relay 2 and toggle relay state
5 and 6	Hold 5+ sec	Physically select relay 3
	Hold 10+ sec	Physically select relay 3 and toggle relay state
7 and 8	Hold 5+ sec	Physically select relay 4
	Hold 10+ sec	Physically select relay 4 and toggle relay state

System overview: modes

104 mode is enabled after the device has been added to a 104 application controller such as zc-iot-fc.

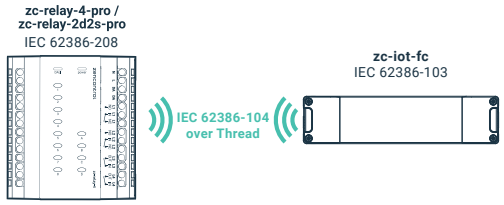

104 + 101 Bridge mode is enabled after the device has been added to a 104 controller and a 101 power supply has been connected to the DALI terminals.

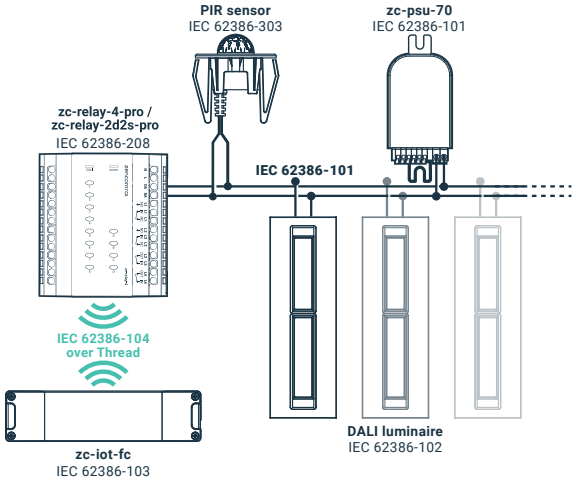

101 mode is enabled after a 101 power supply has been connected to the DALI terminal and the device **has not** been added to a 104 application controller.

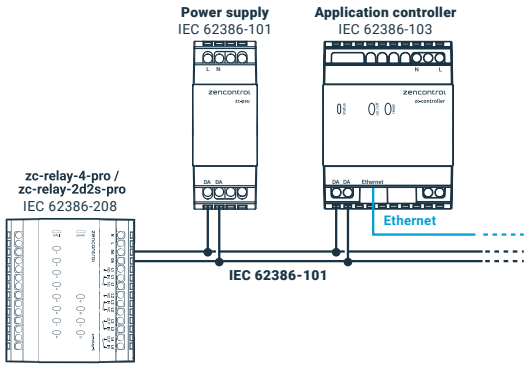

LED indicators

Indicator	Status	Description
Power	ON	Device is powered
	OFF	Device is not powered
DALI	Flashing	There is traffic on DALI line
	OFF	There is no traffic on the DALI line
A	ON	Relay 1 ON
	OFF	Relay 1 OFF
B	ON	Relay 2 ON
	OFF	Relay 2 OFF
C	ON	Relay 3 ON
	OFF	Relay 3 OFF
D	ON	Relay 4 ON
	OFF	Relay 4 OFF

Wiring diagram

zc-relay-4-pro

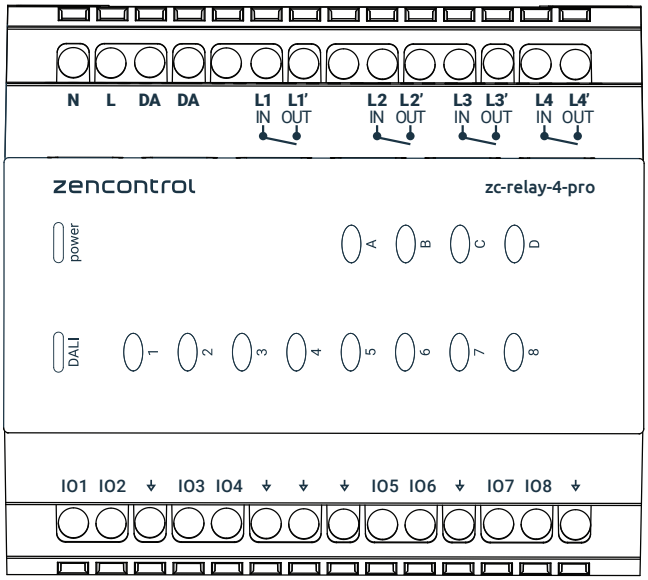

zc-relay-2d2s-pro

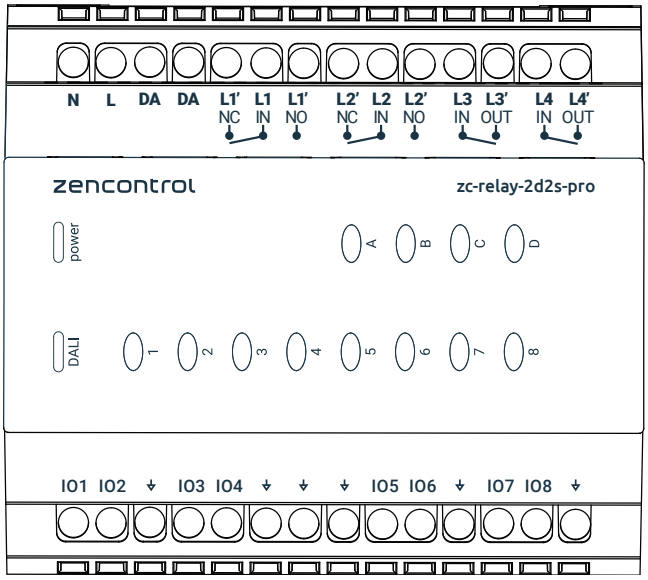

0553257_V 2.1
Last updated 18 / 04 / 23
Information is subject to change without notice, E&OE

© zencontrol