4-Channel DALI relay controller **zc-relay-2d2s**

zencontrol

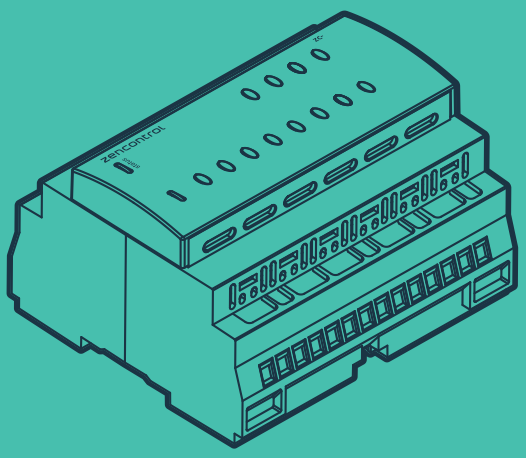

Product range

Order code	Description
zc-relay-2d2s	4-Channel DALI relay controller, 2 x SPST + 2 x SPDT

Specifications

Supply voltage	220 - 240 V ~ 50 Hz
Control system	**Wired** DALI-2 **Wireless** IEC62386-104 over Thread
Radio support	IEEE 802.15.4
Frequency band	2.4 GHz
DALI line current	2 mA
Relay type	2 x SPST 2 x SPDT
Output type	4 x dry-contract volt-free relay
Output load AC	10 A resistive ☼ 6 A inductive
Max inrush (SPST only)	165 A 20 ms 492 A 1.5 ms
Output voltage rating AC	0 - 240 V ~ 50 Hz
Output load rating DC	0 - 25 V 3 A resistive ☼ 25 - 240 V 200 mA resistive ☼
Min. rated relay operations	12 000
Max. operations per hour	360
Wiring	1 - 4 mm^2 Strip 6 - 7 mm
Operating temperature	0 to 45°C
Operating humidity	0 to 85 %
Material	PC
Classification	Class II

Dimensions

Mounting options	DIN rail (35 mm)
Dimensions	92.5 / 106 / 62 mm

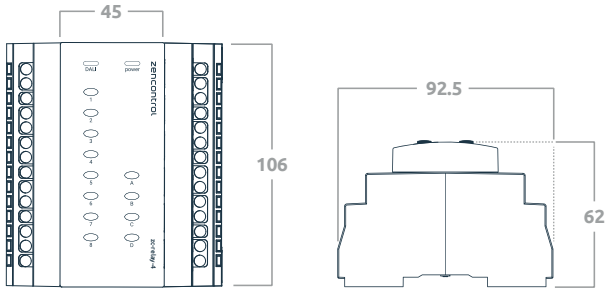

Installation

Remove the product from the box and inspect it for any damage. If you believe the product to be damaged or otherwise unsound, ***do not*** install the product. Please pack it back into its box and return it to the place of purchase for replacement.

If the product is satisfactory, proceed with the installation:

1. Ensure safety warnings are adhered to.
2. Mount the DALI application controller on DIN rail inside a mains rated enclosure as shown in ***fig 1.*** To remove from DIN rail, release the clip mechanism with a flat blade screw driver, as per ***fig 2***.
3. Wire the DALI application controller as per ***wiring diagram***, overleaf.
4. Connect multiple Application controllers to TCP/IP network using inbuilt network switch.

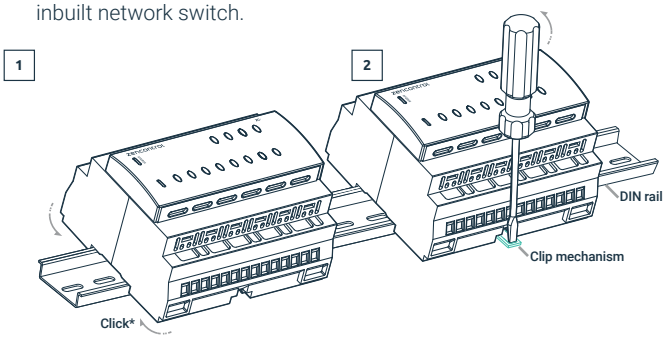

Safety information

- This product must only be installed by a licensed electrician.
- Before commencing installation turn off and isolate the electrical supply.
- There are no user serviceable parts, attempting to service any part of the product will void the warranty
- DALI is not SELV and as such should be treated as LV.
- As the installer, it is your responsibility to ensure you comply to all relevant building and safety codes. Refer to applicable standards for the relevant rules.
- When the installation is complete, leave this manual with the building's owner for future reference.

Relay button actions

Button	Action	Function
A	Hold	Relay 1 state off override
B	Hold	Relay 2 state off override
C	Hold	Relay 3 state off override
D	Hold	Relay 4 state off override
1 and 2	Hold 5+ sec	Physically select relay 1
	Hold 10+ sec	Physically select relay 1 and toggle relay state
3 and 4	Hold 5+ sec	Physically select relay 2
	Hold 10+ sec	Physically select relay 2 and toggle relay state
5 and 6	Hold 5+ sec	Physically select relay 3
	Hold 10+ sec	Physically select relay 3 and toggle relay state
7 and 8	Hold 5+ sec	Physically select relay 4
	Hold 10+ sec	Physically select relay 4 and toggle relay state

LED indicators

Indicator	Status	Description
Power	ON OFF	Device is powered Device is not powered
DALI	Flashing OFF	There is traffic on DALI line There is no traffic on the DALI line
A	ON OFF	Relay 1 ON Relay 1 OFF
B	ON OFF	Relay 2 ON Relay 2 OFF
C	ON OFF	Relay 3 ON Relay 3 OFF
D	ON OFF	Relay 4 ON Relay 4 OFF

Wiring diagram

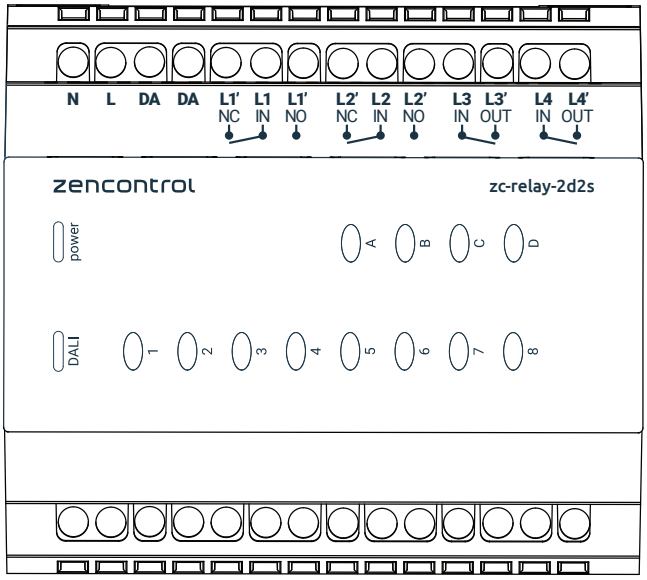

System overview: modes

104 mode is enabled after the device has been added to a 104 application controller such as zc-iot-fc.



104 + 101 Bridge mode is enabled after the device has been added to a 104 controller and a 101 power supply has been connected to the DALI terminals.

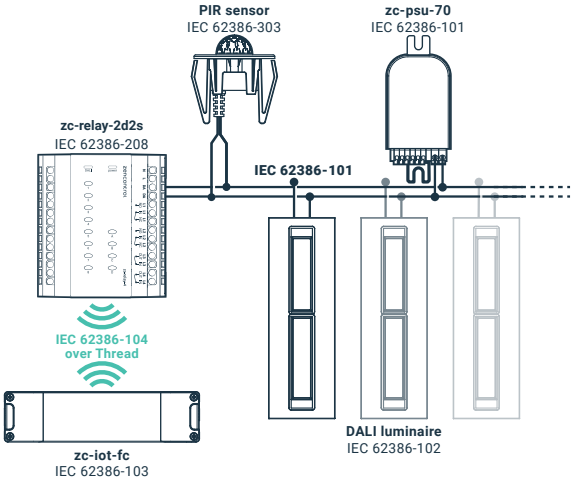

101 mode is enabled after a 101 power supply has been connected to the DALI terminal and the device **has not** been added to a 104 application controller.

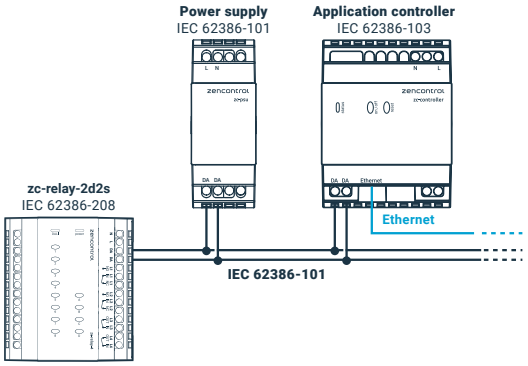

Notice

For more information on compliant software see our website **zencontrol.com**

0553257_V2.0
Last updated 07/12/22

Information is subject to change without notice. E&OE

© zencontrol