Nano Dimmer user guide.

Modified on: Thu, 14 Mar, 2019 at 4:03 PM

Aeotec Nano Dimmer user guide.

Aeotec Nano Dimmer has been crafted to power connected lighting using **Z-Wave Plus** (http://aeotec.com/z-wave-plus). It is powered by Aeotec's **Gen5** (http://aeotec.com/z-wave-gen5) technology. You can find out more about **Nano Dimmer** (http://aeotec.com/z-wave-light-dimmer-switch) by following that link.

To see whether Nano Dimmer is known to be compatible with your Z-Wave system or not, please reference our **Z-Wave gateway comparison** (http://aeotec.com/z-wave-gateways) listing. The **technical specifications of Nano Dimmer** (https://aeotec.freshdesk.com/solution/articles/6000165398-nano-dimmer-technical-specifications) can be viewed at that link.

Familiarize yourself with your Nano Dimmer.

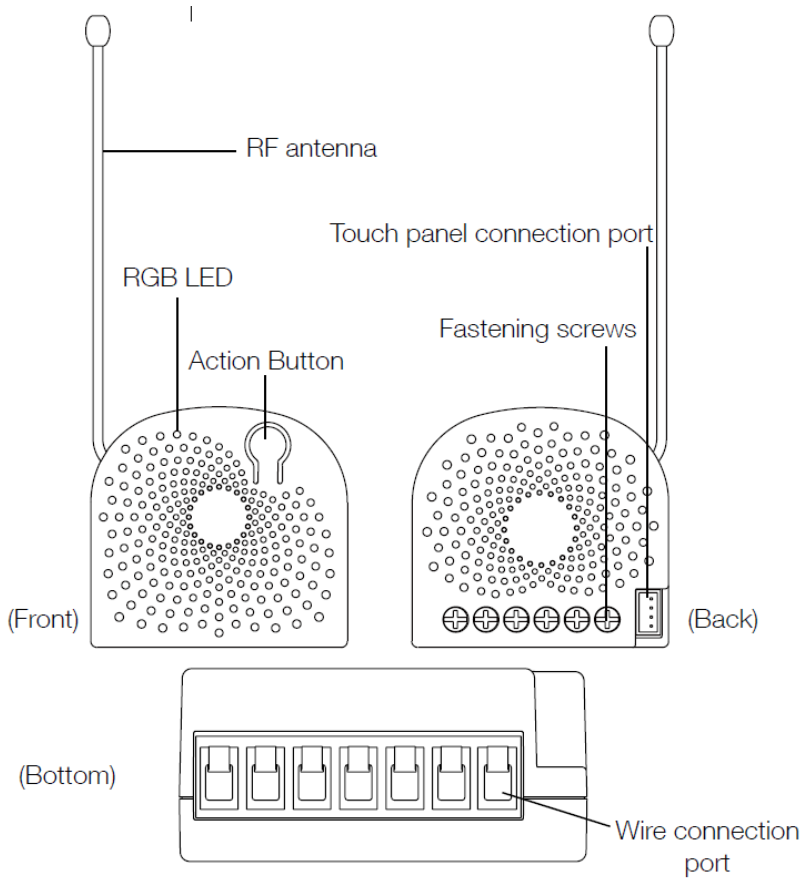

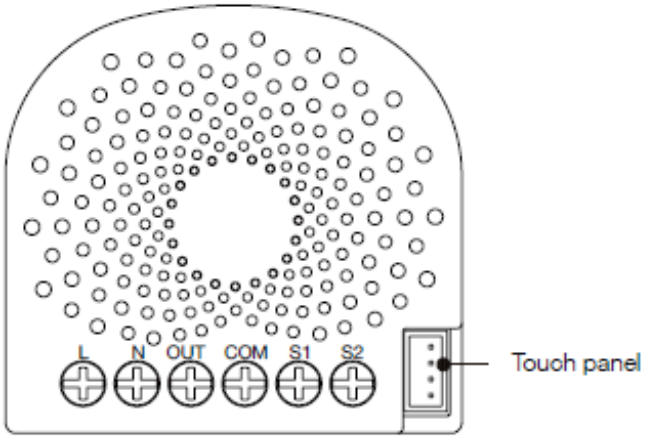

Notes for the wire connection ports and terminals:
L – Power input for live
N – Power input for neutral
OUT – Output for load
COM – Common port for all External switches (S1 and S2)
S1 – External switch 1 control for load
S2 – External switch 2 control for load

Warning.

1. Install only in a UL listed junction box sized 3×2×2.75 inch (75×50×70 mm) or larger, minimum volume 14 in^3 (230 cm^3).
2. Use Copper Conductors Only.
3. “CAUTION – Risk of Electric Shock – More than one disconnect switch may be required to de-energize the equipment before servicing”.
4. “WARNING - This device shall not be used in combination with a wall switch controlling a receptacle.”

Important safety information.

Please read this and other device guides carefully. Failure to follow the recommendations set forth by Aeotec Limited may be dangerous or cause a violation of the law. The manufacturer, importer, distributor, and / or reseller will not be held responsible for any loss or damage resulting from not following any instructions in this guide or in other materials.

Warning: Risk of electrical shock. The main circuit breaker or fuse must be shut off during installation. A licensed electrician with knowledge and understanding of electrical systems and safety should complete the installation.

Keep product away from open flames and extreme heat. Avoid direct sun light or heat exposure.

Nano Dimmer current can not exceed 1.2 amps. Its maximum rated power output is 144 watts for 110 volt models, and 278 watts for 220-240 volt models and comparable.

Pre-Installation of Nano Dimmer.

Nano Dimmer installs behind a lighting switch or dimmer. It works with both 2-wire and 3-wire (with or without neutral) lighting setups, though each installation of Nano Dimmer is accordingly slightly different:

- First determine if there is a neutral wire present in your gangbox located behind your lighting switch. This will determine if you are wiring under 2-wire or 3-wire.
    - If there is a neutral present, you will follow "Wiring diagram of 3-Wire system" under the section "Install Nano Dimmer"
    - If there is no neutral present, you will follow "Wiring diagram of 2-Wire system" under the section "Install Nano Dimmer"

- Depending on your load size, you may or may not need to install a **bypass load** if your minimum load does not meet expectations. To determine if you need a Bypass load, determine if your load meets the minimum power requirements.

Installation Type	**Minimum load power requirement.**
3-wire Installation with Neutral Wire	10W
2-wire Installation without Neutral Wire	20W

- There are some important electrical specifications you will need to know about Nano Dimmer before installing it to your load:

  Power input: 120 to 240VAC, 50/60Hz.
  Maximum Rated Current Output: 1.2A maximum
  Maximum Rated Power Output: 144W maximum.

  If your Load (ie. 4x Incandecent bulbs each 40W each = 160W) exceeds 144W maximum load, your Nano Dimmer will automatically turn itself off after a certain amount of time to avoid any damages to it. In this case, it would be best to replace your load with low power bulbs which will help save power, and ensure that you do not bypass the 144W load.

- Last but not least, please note the Nano Dimmers **Supported Loads** before you continue on to installation:

Control ability	Supported load types
With dimming function (On/Off/Dim control)	Incandescent bulbs, Halogen bulbs with or without electronic transformer, Dimmable LED bulbs (leading edge and trailing edge), Dimmable Fluorescent lamps.
Without dimming function (On/Off control only)	Non-dimmable bulbs, Compact fluorescent lamps with electronic rectifier, Fluorescent tube lamps with electronic ballast, LED Bulbs

Compatible external switches and their use case.

Our Nano Dimmer currently only supports 3 different external Wall Switches:

1. **Standard Toggle Switch**
   - Toggle once - toggles last dim level / OFF.

2. **Momentary Push Button**
   - Tap once - toggle last dim level / Off.
   - Press and Hold - Ramp up or down LED level.
   - Press and Hold for 20 seconds or more - factory reset Nano dimmer.

3. **WallSwipe for Nano**
   - Tap area - depending on the area you tap, you can toggle, or set it to a specific dim level.
   - Press and hold - Ramp up or down LED level based on the position of your finger.
   - Swipe up gesture - ramp lights up.
   - Swipe down gesture - ramp lights down.

Install Nano Dimmer.

There are many ways to wire the Nano Dimmer and its external switches. We will only cover a few wiring methods in this article, while if you have any further questions on wiring, please do not hesitate to reach out to our support team.

Wiring diagram of 3-Wire system (with neutral).

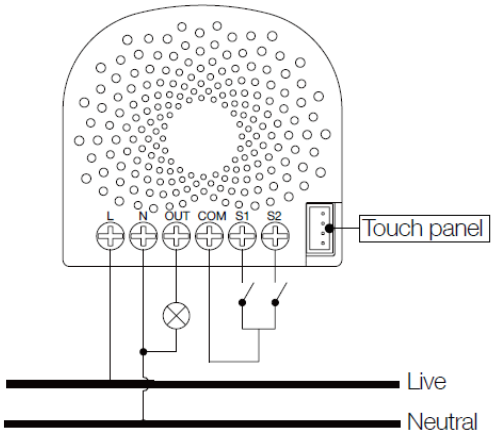

- You may follow the article ***How to wire Nano Dimmer with neutral wire*** (https://aeotec.freshdesk.com/solution/articles/6000165394/en) for a step by step installation guide which includes an installation video.

Wiring diagram of 2-Wire system (without neutral).

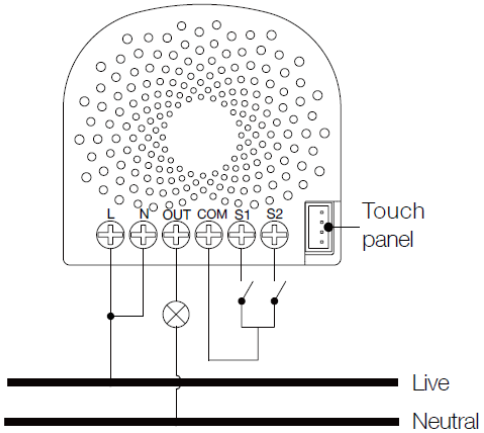

Note: The “N” terminal should be connected to the “L” terminal when the Nano Dimmer is installed by 2-Wire system.

- You may follow the article ***How to wire Nano Dimmer without a neutral wire*** (https://aeotec.freshdesk.com/solution/articles/6000167411-how-to-wire-nano-dimmer-without-a-neutral-wire-) for a step by step installation guide which includes an installation video.

Installing a Bypass Load.

You may need to connect a small power load (E.g. a LED light or a compact fluorescent lamp) to be controlled. In this case, the Nano Dimmer may not get enough power from the AC power supply, so a bypass can be added to act as a dummy load to keep your Nano Dimmer get enough power from the power supply. It can also keep your light from flickering when diming off the light.

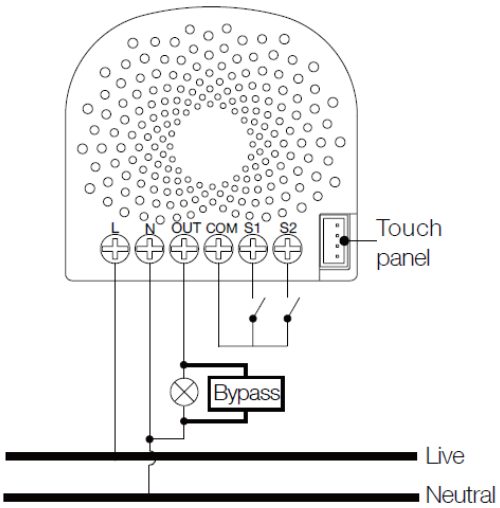

or

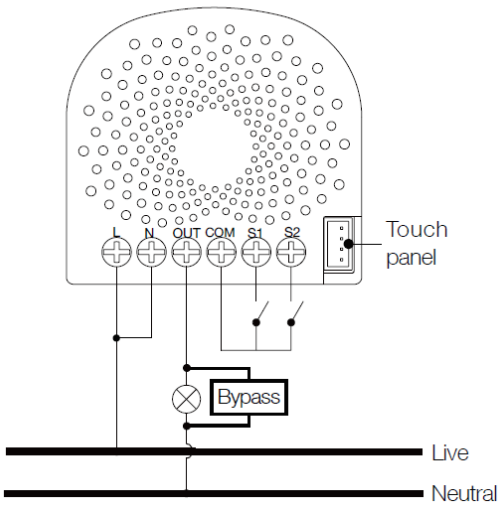

- You may follow the article ***How to wire a Bypass Load to your Nano Dimmers Load*** (https://aeotec.freshdesk.com/solution/articles/6000168292-how-to-wire-a-bypass-to-your-nano-dimmer-load-) for a step by step installation guide which includes an installation video for your bypass load.

Wiring diagram of SPDT as the external manual switch (3-way Switch).

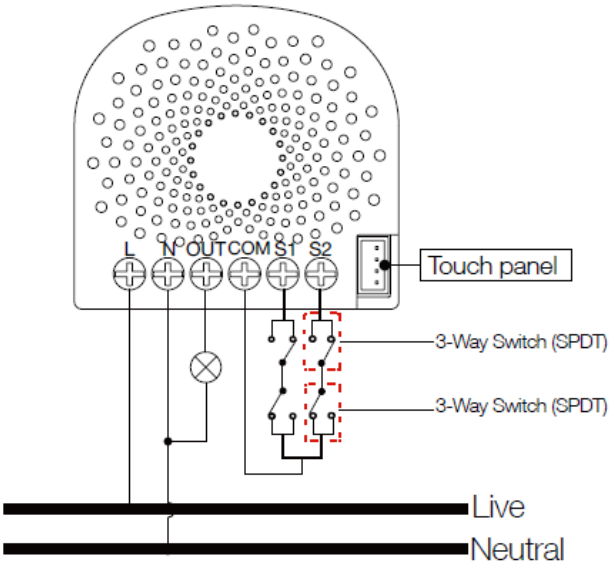

- You may follow the article **Nano Dimmer wiring 3-way/4-way/5-way switch methods** (https://aeotec.freshdesk.com/solution/articles/6000176583-nano-dimmer-wiring-3-way-4-way-5-way-switch-methods-) for more information on how to wire a 3-way over your Nano Dimmer. This will provide you with more information on how to wire a 3-way, 4-way, or 5-way Nano Dimmer and its restrictions.

Z-Wave Network Installation.

Adding your Nano Dimmer to a Z-Wave network using the Internal Button.

After your Nano Dimmer is installed and powered on, you are now able to manually control the Nano Dimmer to turn it On/Off/Dim directly via pressing your Nano Dimmer's Action Button, it is time to add your Nano Dimmer to the Z-Wave network. To set your Z-Wave gateway/controller into pairing mode, please refer to the respective section within your controller instruction manual.

1. Set your Z-Wave controller into pairing mode.
2. Press the Action Button on the Nano Dimmer, the green LED (basic secure indication) will blink to indicate the Nano Dimmer is entering into pairing mode.
3. If the Nano Dimmer has been successfully added to your Z-Wave network, its RGB LED will be solid. If the pairing was unsuccessful, the red LED will be on for 2 seconds and then remain a colourful gradient, repeat the instructions above from step 1.

With your Nano Dimmer now working as a part of your smart home, you'll be able to configure it from your home control software/phone application. Please refer to your software's user guide for further instructions on configuring Nano Dimmer to your needs.

The colour of RGB LED will change according to the output load power level:

Version	LED indication	Output (W)
US	Green	[0W, 48W)
	Yellow	[48W, 96W)
	Red	[96W, 144W)
AU	Green	[0W, 92W)
	Yellow	[92W, 184W)
	Red	[184W, 276W)
EU	Green	[0W, 92W)
	Yellow	[92W, 184W)
	Red	[184W, 276W)

Adding your Nano Dimmer to Z-Wave network using the External Switch.

Using this method, you will never have to remove the external switch to get to your Nano Dimmers button to perform an inclusion.

1. Set your Z-Wave controller into pairing mode
2. Toggle the External Switch once (If using a momentary push button tap the button once), the green LED (basic secure indication) will blink to indicate the Nano Dimmer is entering into pairing mode.
3. If the Nano Dimmer has been successfully added to your Z-Wave network, its RGB LED will be solid. If the pairing was unsuccessful, the red LED will be on for 2 seconds and then remain a colourful gradient, repeat the instructions above from step 1.

Removing Nano Dimmer from a Z-Wave network using the Internal Button.

Your Nano Dimmer can be removed from your Z-Wave network at any time. You'll need to use your Z-Wave network's main controller. To set your Z-Wave controller/gateway into removal mode, please refer to the respective section within your controller instruction manual.

1. Set your Z-Wave controller into removal mode.
2. Press the Action Button on the Nano Dimmer.
3. If the Nano Dimmer has been successfully removed from your Z-Wave network, its RGB LED will remain colourful gradient. If the removal was unsuccessful, the RGB LED will still be solid (following the state of the output load), repeat the instructions above from step 1.

Removing your Nano Dimmer to Z-Wave network using the External Switch.

Using this method, you will never have to remove the external switch to get to your Nano Dimmers button to perform an exclusion.

1. Set your Z-Wave controller into removal mode.
2. Toggle the External Switch 2 times within 1 second (If using a momentary push button tap the button 2 times within 1 second).
3. If the Nano Dimmer has been successfully removed from your Z-Wave network, its RGB LED will remain colourful gradient. If the removal was unsuccessful, the RGB LED will still be solid (following the state of the output load), repeat the instructions above from step 1.

Advanced functions.

Changing mode on the External Switch/Button Control.

The Nano Dimmer can be controlled via 2-state (flip/flop) external/manual switch, momentary push button or the 3-way switch. To automatically detect and set the mode to the appropriate type of manual switch wired into Nano Dimmer, toggle the button on the manual switch once and wait 2 seconds for the Nano Dimmer to detect the type of manual switch.

You can also set the external switch mode through Configuration Command Class.

Parameter 120 [1 byte] (for S1) and Parameter 121 [1 byte] (for S2) is the parameter that will set one of the 3 different modes. You can set this configuration to:

(0) Unknown Mode
(1) 2-state switch mode
(2) 3-way switch mode
(3) Momentary push button Mode
(4) Enter auto switch detection mode

0x78 (120)	Configure the external switch mode for S1. 0 = Unidentified mode. 1 = 2-state switch mode. 2 = 3-way switch mode. 3 = momentary switch button mode. 4 = Enter automatic identification mode. Note: When the mode is determined, this mode value will not be reset after exclusion.	0	1
0x79 (121)	Configure the external switch mode for S2. 0 = Unidentified mode. 1 = 2-state switch mode. 2 = 3-way switch mode. 3 = momentary switch button mode. 4 = Enter automatic identification mode. Note: When the mode is determined, this mode value will not be reset after exclusion.	0	1

Touch panel control.

As you can see that the Nano Dimmer's surface has a pin port, this port is used to connect the Touch panel. When you have already connected it to the Nano Dimmer, you will be possible to control the Nano Dimmer through the Touch panel directly.

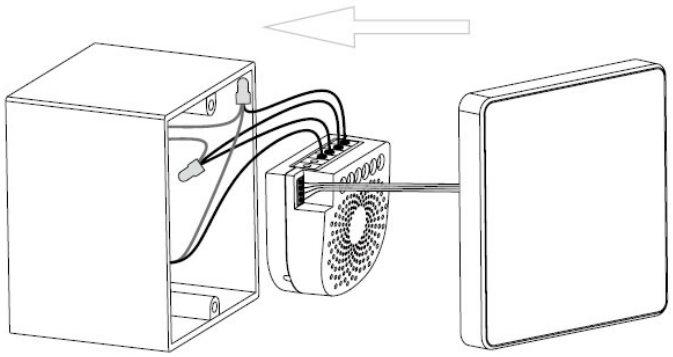

Monitoring Energy Consumption.

The Aeotec Nano Dimmer can report wattage energy usage or kWh energy usage to a Z-Wave control point when requested. If this function is supported by the control points, the energy consumption will be displayed in the user interface of the control points. (The specific Z-Wave commands supporting energy monitoring are the Meter Command Class. Automatic reports are sent to association group 1, which is setup via the Association Command Class.) Please consult the operation manual for these control points for specific instructions on monitoring the Nano Dimmer.

Advanced or Basic security feature of your Nano Dimmer in Z-Wave network.

Including Nano Dimmer as a basic secure device:

If you want your Nano Dimmer as a basic secure device in your Z-Wave network, press the Action Button once on Nano Dimmer when you pair it to your gateway. If inclusion is successful, the green LED will be on for 2 seconds, and then return to a solid indication. If inclusion is unsuccessful, the red LED will be on for 2 seconds and then return to a colourful gradient.

Including Nano Dimmer as a advanced secure device:

In order to take full advantage of the Nano Dimmer, you will want your Nano Dimmer as a security device that uses encrypted messages to communicate in your Z-wave network. A security enabled controller/gateway (or Z-Wave Plus controller) is required.

1. Set your Z-Wave Plus controller into pairing mode.
2. Press the Action Button 2 times within 1 second on the Nano Dimmer, the blue LED (advanced secure indication) will blink to indicate the Nano Dimmer is entering into advanced secure pairing mode.
3. If the Nano Dimmer has been successfully added to your Z-Wave network, its RGB LED will be solid. If the pairing was unsuccessful, the red LED will be on for 2 seconds and then remain a colourful gradient, repeat the instructions above from step 1.

Reset your Nano Dimmer.

If at some stage, your primary controller is missing or inoperable, you may wish to reset all of your Nano Dimmer's settings to their factory defaults.

To do this, press and hold the Action Button for 20 seconds and then release it. Your Nano Dimmer will now be reset to its original settings, and the green LED will be solid for 2 seconds and then remain the colourful gradient status as a confirmation.

Manually detecting or setting the External Switch over S1 or S2 terminals.

There are actually 2 different methods that you can approach this issue, (1) use your gateway to send in the configuration settings, or (2) manually toggle the internal button of Nano to force it into switch detection mode.

Method 1 - Parameter settings

If you have an understand on how to use your gateway to send in parameter settings, you can refer to the below parameter settings.

0x78 (120)	Configure the external switch mode for S1. 0 = Unidentified mode. 1 = 2-state switch mode. 2 = 3-way switch mode. 3 = momentary switch button mode. 4 = Enter automatic identification mode. Note: When the mode is determined, this mode value will not be reset after exclusion.	0	1
0x79 (121)	Configure the external switch mode for S2. 0 = Unidentified mode. 1 = 2-state switch mode. 2 = 3-way switch mode. 3 = momentary switch button mode. 4 = Enter automatic identification mode. Note: When the mode is determined, this mode value will not be reset after exclusion.	0	1

Method 2 - Manually forcing Nano to enter switch detection mode for S1 or S2

To force the Nano to enter external switch detection mode again (For S1):

1. Tap the Nano button 4x times within 1-2 seconds which will force Nano to enter External Switch detection mode. (LED will flash blue)
2. Flip your external switch once, then wait at a minimum 10 seconds before you flip the switch again.
3. Now test your external switch.

To force the Nano to enter external switch detection mode again (For S2):

1. Tap the Nano button 6x times within 1-2 seconds which will force Nano to enter External Switch detection mode. (LED will flash green)
2. Flip your external switch once, then wait at a minimum 10 seconds before you flip the switch again.
3. Now test your external switch.

Adjusting dimming range and ramp speed of Nano Dimmer.

You may notice that the dimming ranges over your dimmable LED bulb will vary, and sometimes it may seem that your dimmable LED bulb turns on instantly. You can adjust the range of dim level as well as the speed that the Nano Dimmer ramps up or down.

You may find more information in our article: **Adjusting dimming ranges and rate of dim speed with Nano Dimmer.** (https://aeotec.freshdesk.com/solution/articles/6000174351-adjusting-dimming-ranges-and-rate-of-dim-speed-with-nano-dimmer-)

More Advanced Configurations.

You can find more advanced configurations for Nano Dimmer in our Engineering Sheet section on our Freshdesk which can be used to integrate Nano Dimmer into a new gateway or software, or use it as a reference for configurations.

1. **Nano Dimmer Engineering Sheet** (https://aeotec.freshdesk.com/helpdesk/attachments/6054964678)

You can find more engineering sheets for all of our products here:
https://aeotec.freshdesk.com/solution/folders/6000209471 (https://aeotec.freshdesk.com/solution/folders/6000209471)