KNX presence detector, Universal, 3.00 m, thermoplastic, white



Reference number:	3361-1 WW
EAN/GTIN:	4011377095489
Color:	white
Material:	thermoplastic

Universal
ETS product family: Physical sensors
Product type: Movement

Intended use
- Requirement-oriented control of lighting, room thermostats and other electrical loads in interiors
- Ceiling installation on fixed ceilings in flush box with dimensions according to DIN 49073 or surface-mounted housing ref.-no.: PM-KAPPE-1 or PM-KAPPE AL-1

Product characteristics
- Integrated bus coupling unit
- 3 PIR sensors
- Detection field 360°
- Integrated brightness sensor
- Deployed as presence detector, motion detector, or for alert operation
- Output functions: Switching, staircase lighting function, switching with forced position, value transmitter, light scene extension, operating mode setting for room temperature controller
- Extension of the detection area by way of operating several devices as main unit or extension unit
- Adjuster for manual adjustment of sensitivity
- Status LED: Flashes during motion detection; depending on programming in normal operation or only during the walking test mode

Additional characteristics of "Universal" version:
- Manual operation with IR remote control possible (ref.-no.: KNX PM FB IR)
- 5 function blocks for motion detection each with 2 outputs
- Function blocks switchable, e.g. for day/night operation
- PIR sensors can be evaluated separately
- Brightness sensor function with 3 limiting values
- Daylight-dependent light control with max. 3 channels, setpoint adjustment during operation, separate configuration of dimming-up, control and dimming-down phase
- Light control can be combined with presence detector function

Presence detector function:
- Detection of the smallest motions e.g. at a workplace for detecting the presence of persons
- Switch on: Motion detection and brightness threshold not reached
- Switch off: No motion in the detection field and run-on time elapsed or brightness threshold exceeded

Motion detector function:
- Motion detection for passageways in buildings

After reacting and switching on, the motion detection works independently of the brightness.

Signalling mode:
- Brightness-independent detection of motions in the detection field
- Switch on: After detection of an adjustable number of motions within the set monitoring period

– Switch off: No motion in the detection field and run-on time elapsed

Accessories:
Accessories:
protection cage ref.-no.: SK 180-90 WW

Accessories:
surface-mounted housing ref.-no.: PM-KAPPE-1, PM-KAPPE AL-1

Technical data

KNX medium:	TP 256
Rated voltage KNX:	DC 21 ... 32 V SELV
Current consumption KNX:	max. 12.5 mA
Connection bus:	terminal
Ambient temperature:	-5 ... +45 °C
Storage/transport temperature:	-25 ... +70 °C
Relative humidity:	5 ... 93 % (no condensation)
Protection class:	III
Detection angle:	360°
Range:	Ø approx. 20 m (mounting height 3 m)
Brightness sensor	
Measuring range:	0 ... 2,000 lx
Detection range:	Ø 2 m

Assembly

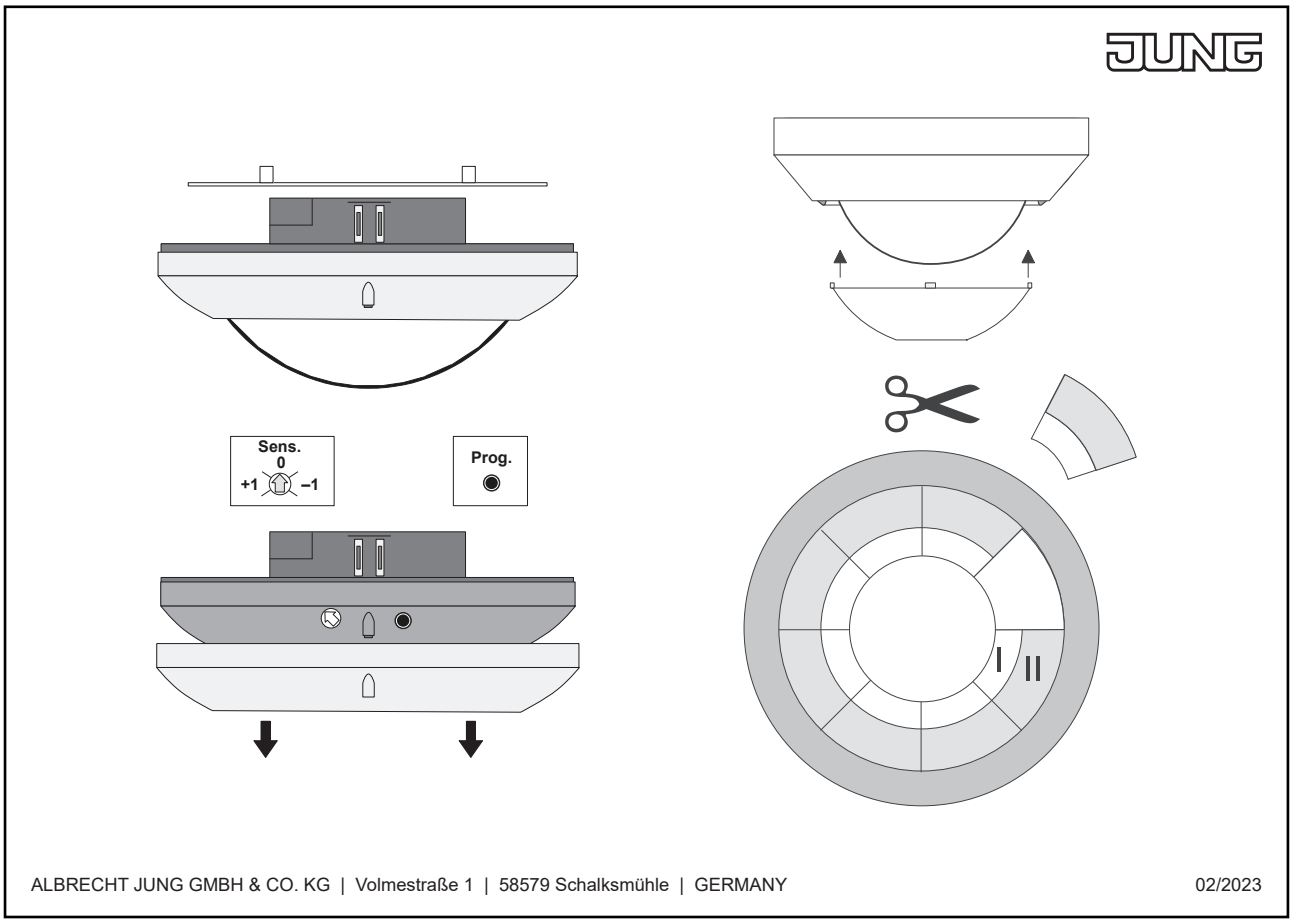
Sens.
0
+1
–1
Prog.
I
II
ALBRECHT JUNG GMBH & CO. KG | Volmestraße 1 | 58579 Schalksmühle | GERMANY
02/2023