Automatic switch KNX, Universal, 1.10 m, thermoplastic, AS/A range, white



Reference number:	A 3181-1 WW
EAN/GTIN:	4011377155619
Color:	white
Material:	thermoplastic

Thermoplastic (breakproof) high-gloss
Universal
for bus coupling unit 3 ref.-no.: 2073 U
ETS product family: Physical sensors
Product type: Movement

Intended use
- Requirement-oriented control of lighting and other electrical loads in interiors
- Mounting on bus coupling unit 3 (ref.-no.: 2073 U)

Product characteristics
- Automatic switching of lighting depending on the thermal movement and ambient brightness
- 2 PIR sensors
- Detection range 180°
- Integrated brightness sensor
- Switch-off brightness can be set
- Output functions: Switching, staircase lighting function, switching with forced position, value transmitter, light scene extension, operating mode setting for room temperature controller
- Extension of the detection area by way of operating several devices as main unit or extension unit
- Sensitivity can be set manually
- Status LEDs
- Manual switching on the device
- Up to half of the detection area can be screened off (cover or parameter setting)

Additional characteristics of "Universal" version:
- Manual operation with IR remote control possible (ref.-no.: KNX PM FB IR)
- 5 function blocks for motion detection each with 2 outputs
- Function blocks switchable, e.g. for day/night operation
- Brightness sensor function with 3 limiting values
- Alarm message in case the device is removed from the bus coupling unit
- Temperature measurement

Technical data

Current consumption KNX:	3 ... 10 mA
Ambient temperature:	-5 ... +45 °C
Storage/transport temperature:	-25 ... +70 °C
Relative humidity:	10 ... 100 % (no condensation)

Protection class:	III
Mounting height:	1.10 m
Detection angle:	180°
Brightness sensor	
Measuring range:	approx. 1 ... 1,000 lx
Temperature sensor	
Measuring range:	-5 ... +45 °C
Accuracy:	± 1 K

Dimensions

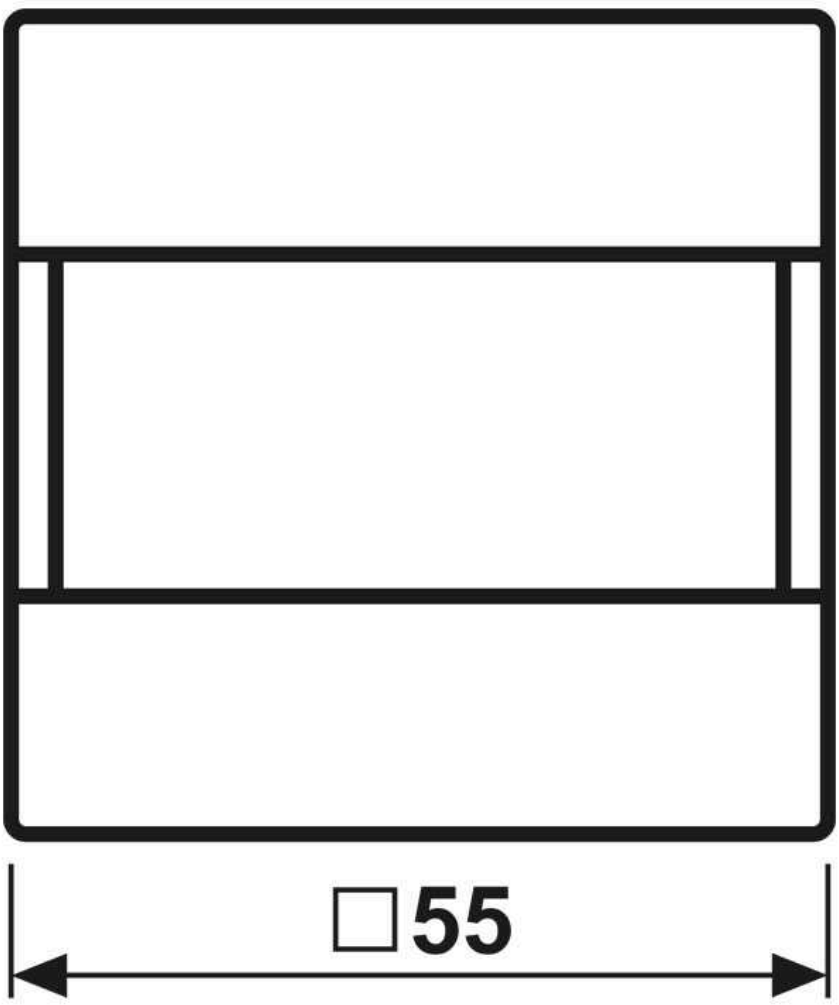

ALBRECHT JUNG GMBH & CO. KG
Volmestraße 1
58579 Schalksmühle

Phone +49 (0) 23 55/80 60
E-Mail kundencenter@jung.de

Assembly

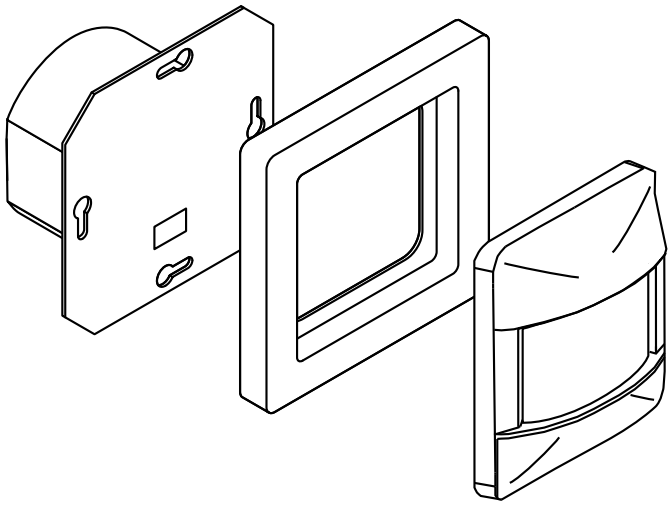

ALBRECHT JUNG GMBH & CO. KG | Volmestraße 1 | 58579 Schalksmühle | GERMANY 01/2023