KNX room controller display module, 3-gang, F40, Secure, AS/A range



Reference number:	A 429 D 1ST
EAN/GTIN:	4011377339217
Material:	plastic
xFach Modul:	3-gang

for cover kit 3-gang, ref.-no.: A 4093 TSA ..
can be extended by means of a push-button extension module, ref.-no.: 409.. TSEM

Intended use
- Operation of loads, e.g. light on/off, dimming, blinds up/down, brightness values, temperatures, calling up and saving light scenes, etc.
- Measurement and feedback control of the room temperature
- Installation in flush box with dimensions according to DIN 49073

Product characteristics
All buttons can be assigned with push-button sensor functions or functions for controller operation.
- KNX medium: TP 256
- Four red status LEDs
- One blue operation LED as orientation light and to indicate the programming status
- Integrated bus coupling unit
- Connection for a push-button extension module, 1-4 gang
- Integrated temperature sensor
- Room temperature control with setpoint specification
- Display of room or set temperature
- Display of outdoor temperature – with external sensor, e.g. weather station
- Display of time, in conjunction with KNX time encoder
- Push-button functions switching, dimming, controlling blinds, value transmitter, calling up light scenes etc.
- Button function or rocker function, vertical or horizontal
- Fan coil application with up to 8 fan levels and auto function
- KNX Data Secure compatible with ETS 5.7.7 or ETS 6.3.0 or higher
- Can be updated with the ETS Service App

Accessories:
Accessories:
Screw assortment for sensors, ref.-no.: S-BOX TSM RT ZN

Technical data

KNX	
KNX medium:	TP

Commissioning mode:	S-mode
Connection, KNX:	connection terminal
Ambient conditions	
Ambient temperature:	-5 ... +45 °C
Storage/transport temperature:	-25 ... +70 °C
Recommended mounting height:	1.5 m

Dimensions

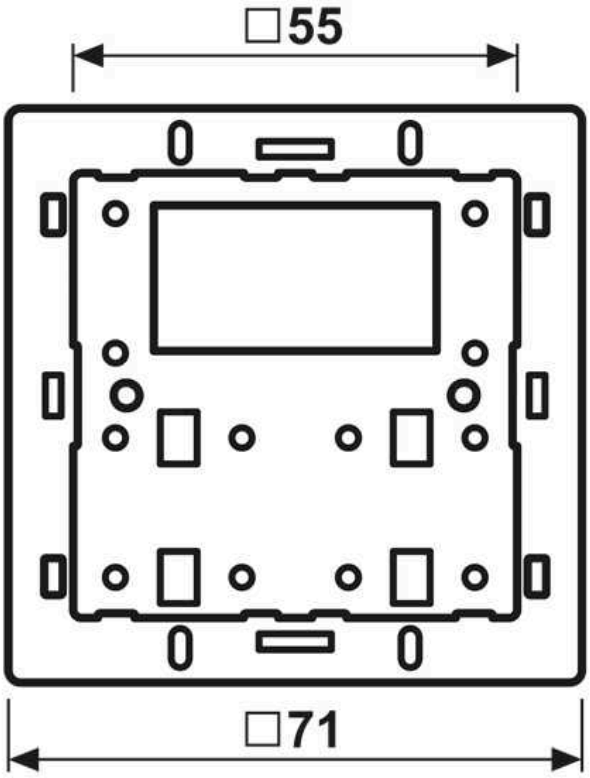

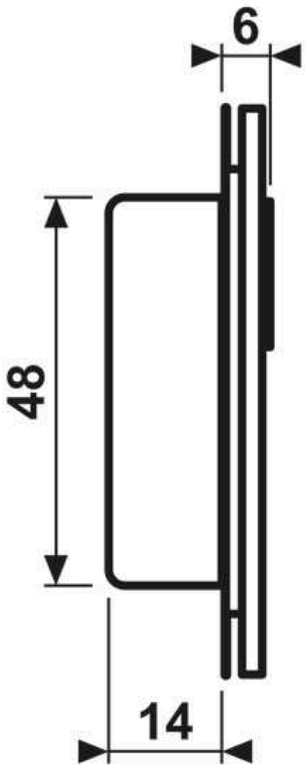

Assembly

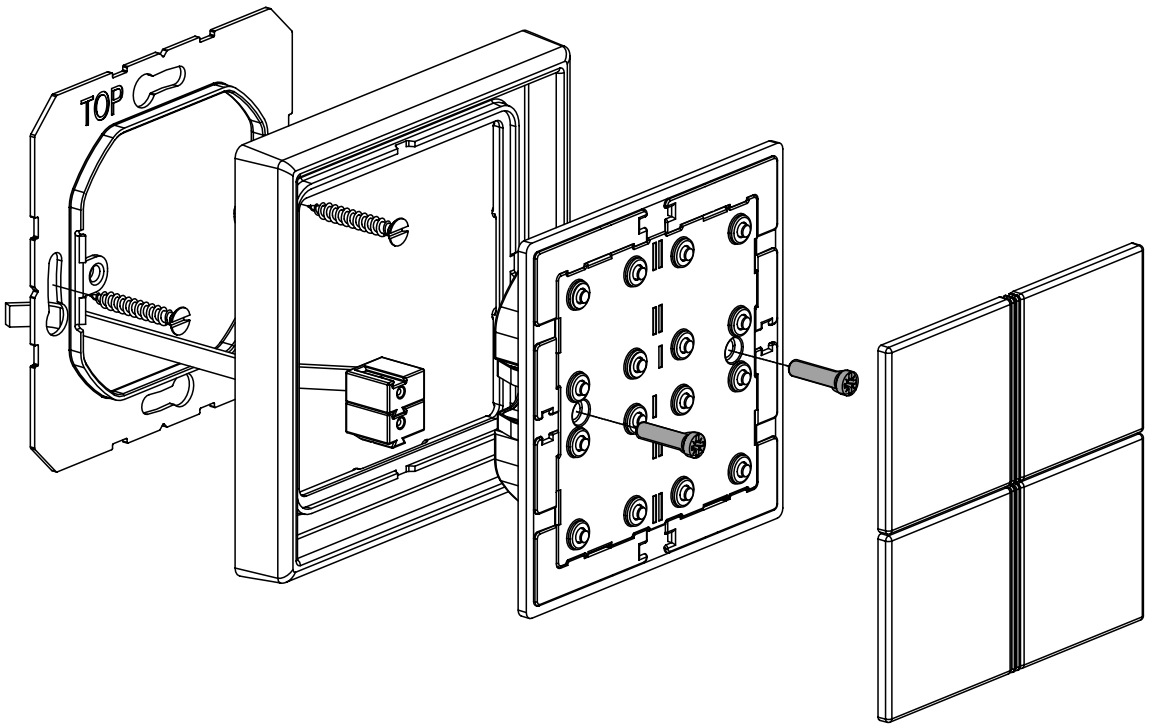

ALBRECHT JUNG GMBH & CO. KG | Volmestraße 1 | 58579 Schalksmühle | GERMANY 11/2025