KNX USB data interface



Reference number:	2131 USBS
EAN/GTIN:	4011377171763

Intended use
- Connecting PCs to KNX systems
- Addressing, programming and diagnostics of KNX devices
- KNX Data Secure compatible with ETS 5.7.3 or higher
- Support of long frames for ETS5
- Installation in flush box with dimensions according to DIN 49073

Product characteristics
- Connection with device connection terminal
- Electrical isolation of KNX and USB
- Temporary operation in unmounted condition permissible
- The firmware in the USB data interface can be updated via the ETS product database
- Power supply exclusively via the USB port

Centre plates:
AS / A ranges: ref.-no. A 569 PLT ..
CD range: ref.-no. CD 569 T ..
LS range: ref.-no. .. 969 T .., .. 2969 T ..

Technical data

KNX medium:	TP 256
Power supply:	via USB port of the PC
Connection	
Connection, KNX:	connection terminal
USB port:	USB port, type B
Transfer rate:	9600 Baud
Transmission protocol:	compatible with USB 1.1/2.0
Length of USB cable:	max. 5 m
Ambient temperature:	-5 ... +45 °C
Storage temperature:	-25 ... +70 °C
Protection class:	II

ALBRECHT JUNG GMBH & CO. KG
Volmestraße 1
58579 Schalksmühle
Phone +49 (0) 23 55/80 60
E-Mail kundencenter@jung.de

Assembly

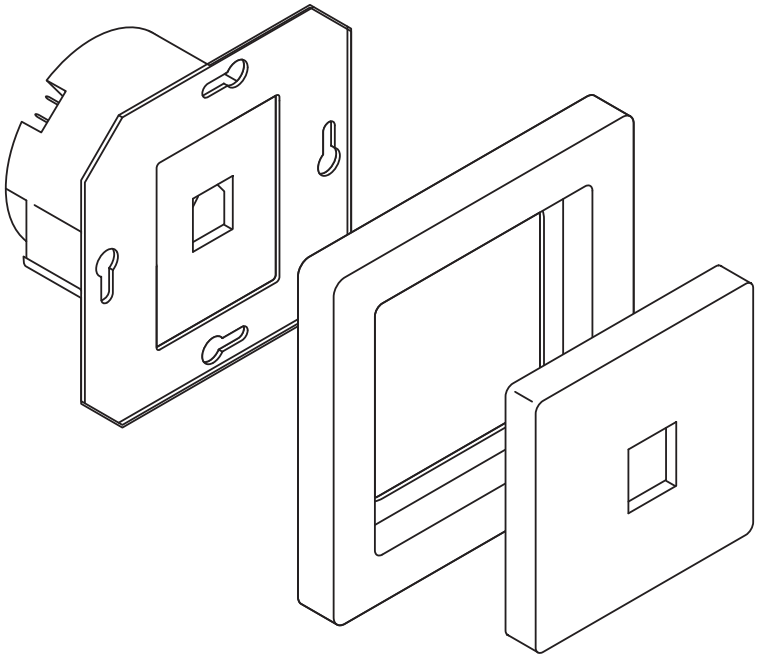

ALBRECHT JUNG GMBH & CO. KG | Volmestraße 1 | 58579 Schalksmühle | GERMANY 02/2023

ALBRECHT JUNG GMBH & CO. KG
Volmestraße 1
58579 Schalksmühle
Phone +49 (0) 23 55/80 60
E-Mail kundencenter@jung.de