Neutral cover, F50, thermoplastic, LS range, white

Reference number:	LS 50 NA WW
EAN/GTIN:	4011377118423
Color:	white
Material:	thermoplastic

Individual colour printing possible
Individual laser engraving possible

Thermoplastic (breakproof) high-gloss
to clip on F 50 push-button modules of the LS range
ref.-no.: LS 507.. TSM, LS 529.. IST, LS 509.. TSEM, LS 5178 TSM, LS 5178 TSEM, LS 507.. RF TSM, LS 52.. TSM, FM LS 50.. M
dimensions: 33 x 70.5 mm

Dimensions



ALBRECHT JUNG GMBH & CO. KG
Volmestraße 1
58579 Schalksmühle

Phone +49 (0) 23 55/80 60
E-Mail kundencenter@jung.de

Assembly

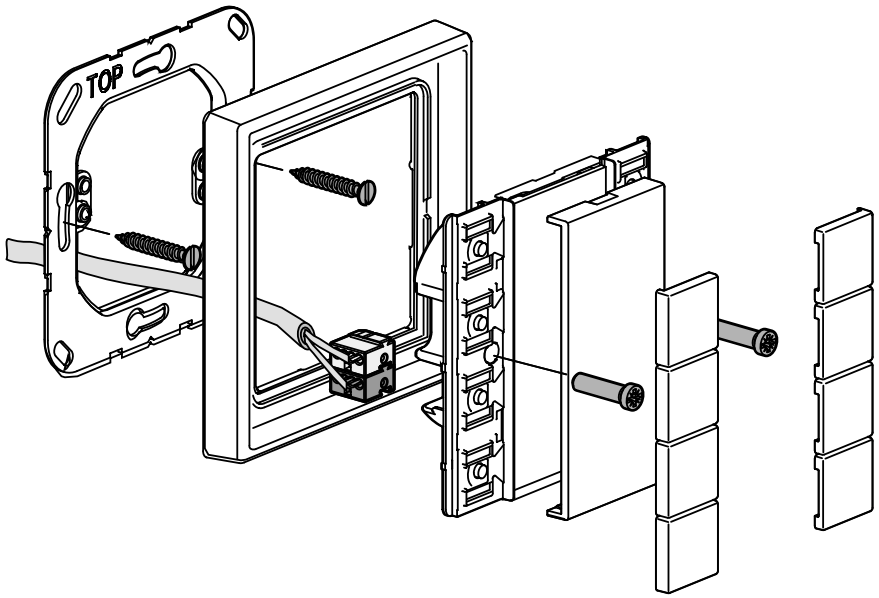

ALBRECHT JUNG GMBH & CO. KG | Volmestraße 1 | 58579 Schalksmühle | GERMANY 09/2022