Cover kit, F50, thermoplastic, LS range, white

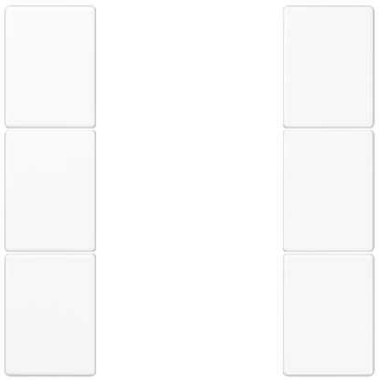

Reference number:	LS 503 TSA WW
EAN/GTIN:	4011377110373
Color:	white
Material:	thermoplastic

Individual colour printing possible
Individual laser engraving possible

Thermoplastic (breakproof) high-gloss
to clip on F 50 push-button modules 3-gang of the LS range
ref.-no.: LS 5073 TSM, LS 5293 1ST, LS 5093 TSEM, LS 5073 RF TSM, LS 5236 TSM, FM LS 5003 M, SI TM LS 5073, SI TM LS 5093

Cradle to Cradle certified

Dimensions

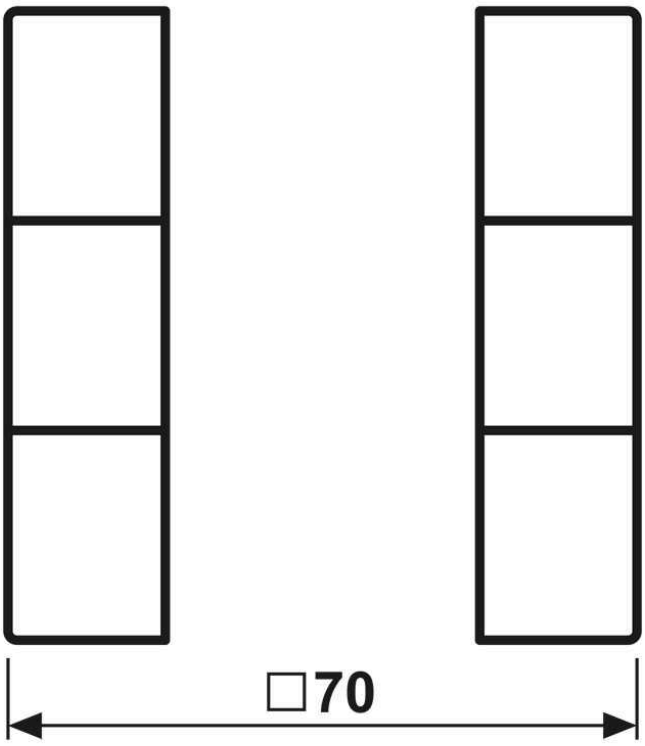

ALBRECHT JUNG GMBH & CO. KG
Volmestraße 1
58579 Schalksmühle

Phone +49 (0) 23 55/80 60
E-Mail kundencenter@jung.de

Assembly

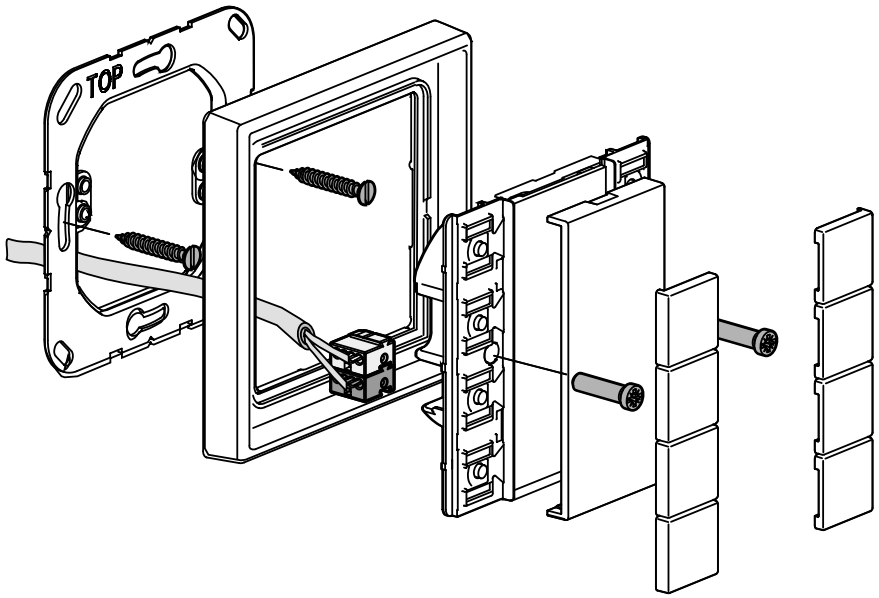

ALBRECHT JUNG GMBH & CO. KG | Volmestraße 1 | 58579 Schalksmühle | GERMANY 09/2022