Cover kit, F50, thermoplastic, LS range, white

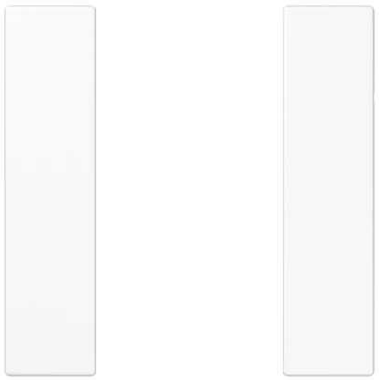

Reference number:	LS 501 TSA WW
EAN/GTIN:	4011377109568
Color:	white
Material:	thermoplastic

Individual colour printing possible
Individual laser engraving possible

Thermoplastic (breakproof) high-gloss
to clip on F 50 push-button modules 1-gang of the LS range
ref.-no.: LS 5071 TSM, LS 5291 1ST, LS 5091 TSEM, LS 5071 RF TSM, LS 5212 TSM, FM LS 5001 M

Cradle to Cradle certified

Dimensions

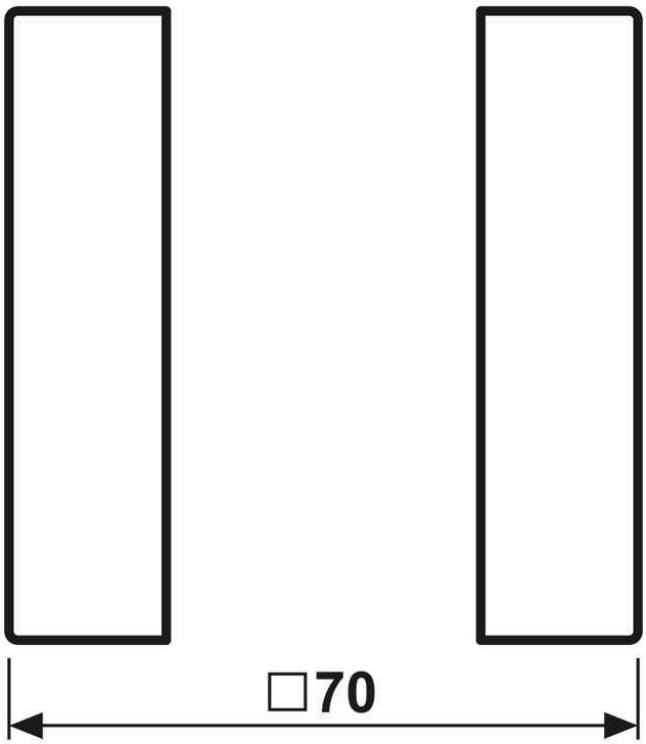

ALBRECHT JUNG GMBH & CO. KG
Volmestraße 1
58579 Schalksmühle

Phone +49 (0) 23 55/80 60
E-Mail kundencenter@jung.de

Assembly

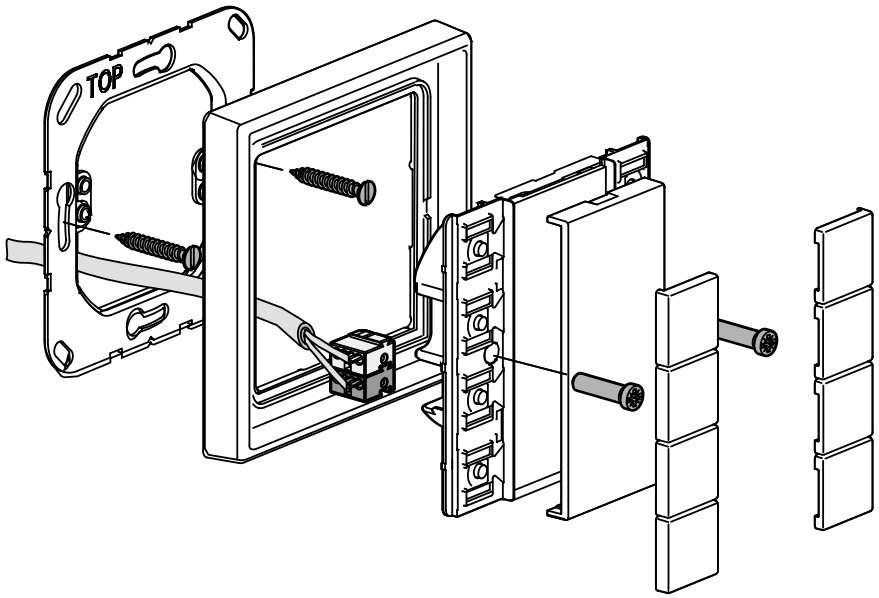

ALBRECHT JUNG GMBH & CO. KG | Volmestraße 1 | 58579 Schalksmühle | GERMANY 09/2022