KNX universal push-button module, 4-gang, F50, Secure, LS range



Reference number:	LS 5294 1ST
EAN/GTIN:	4011377321342
Material:	plastic
xFach Modul:	4-gang

Individual inscription of paper inlays for incription fields possible

including transparent cover ref.-no.: LS 50 NA
for cover kit 4-gang, ref.-no.: ..504 TSA .. in the LS range
can be extended by means of a push-button extension module, ref.-no.: LS 509.. TSEM
ETS product family: Push-button
Product type: 4-gang push-button

Intended use
- Operation of loads, e.g. light on/off, dimming, blinds up/down, brightness values, temperatures, calling up and saving light scenes, etc.
- Installation in flush box with dimensions according to DIN 49073

Product characteristics
- KNX medium: TP 256
- Push-button functions switching, dimming, controlling blinds, value transmitter, calling up light scenes etc.
- One or two functions per button
- To be completed with cover kit
- Inscription field can be illuminated
- One status LED per button, red, green or blue, adjustable
- One operation LED as orientation light and to indicate the programming status – red, green or blue adjustable
- Brightness of status LEDs, operation LED and inscription field adjustable; switchable while in operation, e.g. during the night
- Measurement of room temperature
- Extension unit for room temperature controller
- Disabling function: Disabling or change function mode of single or all button functions
- Alarm function, optional acknowledge by pressing any button
- Energy saving mode
- Integrated bus coupling unit
- Connection for a push-button extension module, 1-4 gang
- Including transparent cover kit for operation on construction site without design covers
- KNX Data Secure compatible with ETS 5.7.7 or ETS 6.3.0 or higher
- Can be updated with the ETS Service App

Spare part:
Spare part:
transparent cover ref.-no.: LS 50 NA

Accessories:
Accessories:

Neutral cover ref.-no.: LS 50 NA W, LS 50 NA WW, LS 50 NA LG, LS 50 NA SW, LS 50 NA WWM, LS 50 NA SWM, AL 50 NA(-L), ES 50 NA(-L), AL 50 NA AN(-L), AL 50 NA D(-L), ME 50 NA C(-L), ME 50 NA AT(-L)
Cover, suitable for backlighting ref.-no.: LS 50 NA TX SW-L

Accessories:

Screw assortment for sensors, ref.-no.: S-BOX TSM RT ZN

Dimensions

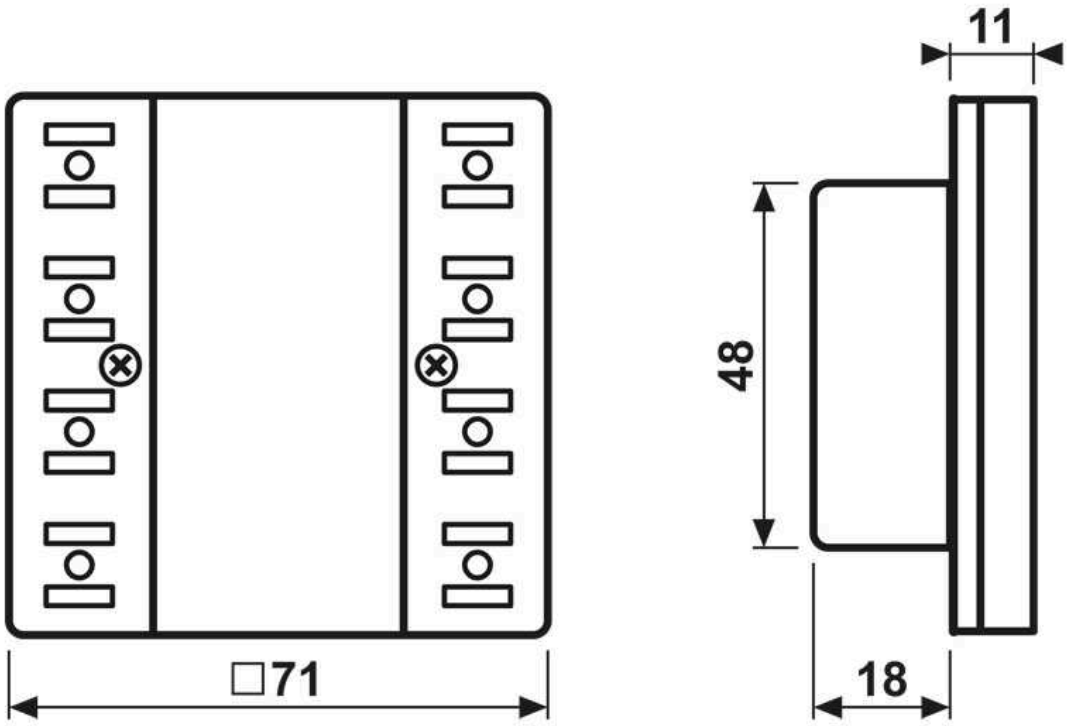

Assembly

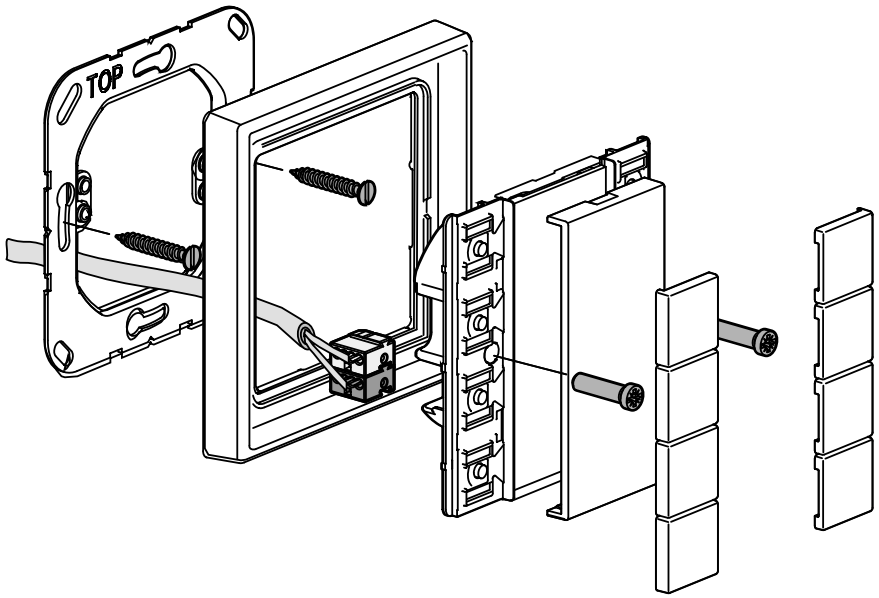

ALBRECHT JUNG GMBH & CO. KG | Volmestraße 1 | 58579 Schalksmühle | GERMANY 09/2022