Operating instructions

Universal push-button module, 1-gang
Art. no. xx 5291 1ST

Universal push-button module, 3-gang
Art. no. xx 5292 1ST

Universal push-button module, 3-gang
Art. no. xx 5293 1ST

Universal push-button module, 4-gang
Art. no. xx 5294 1ST

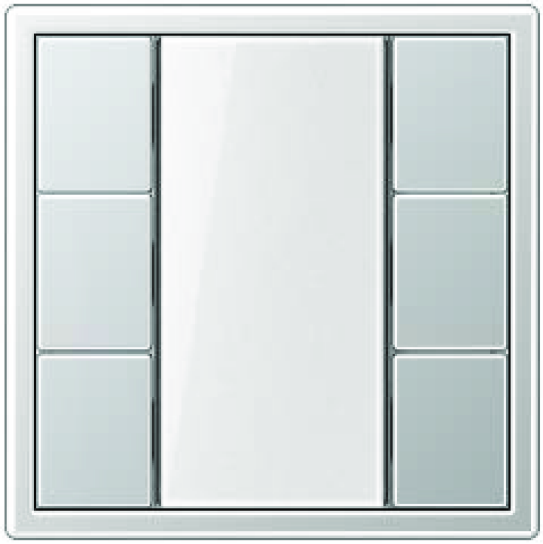

ALBRECHT JUNG GMBH & CO. KG
Volmestraße 1
58579 Schalksmühle
GERMANY

Telefon: +49 2355 806-0
Telefax: +49 2355 806-204
kundencenter@jung.de
www.jung.de

Product image non-binding

12.11.2025
32408023 j0082408023

Table of contents

1 Safety instructions ... 3
2 Device components ... 3
3 System information ... 3
4 Intended use ... 4
5 Product characteristics ... 4
6 Operation ... 5
7 Information for electrically skilled persons ... 5
7.1 Commissioning ... 7
7.1.1 Safe-state mode ... 8
7.1.2 Master reset ... 8
8 Flashing frequencies of the LEDs ... 9
9 Technical data ... 9
10 Accessories ... 10
11 Warranty ... 10

1 Safety instructions

To avoid potential damage, read and follow the following instructions:

Electrical devices may be mounted and connected only by electrically skilled persons.

Use only the plastic screws for fastening to the supporting frame! Otherwise safe operation cannot be ensured. Electrostatic discharges can cause defects in the device.

Instructions are part of the product. So keep them in a safe place.

2 Device components

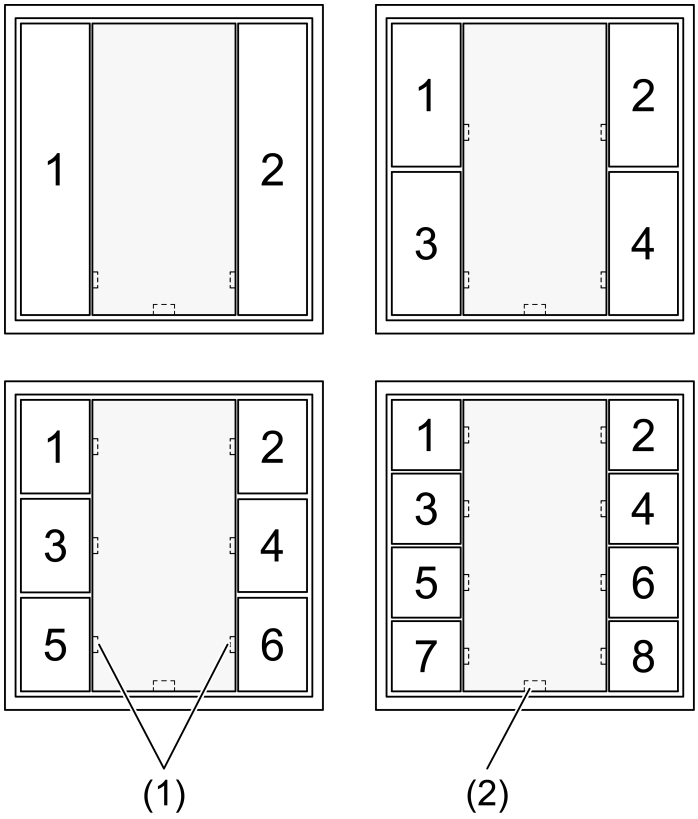

Figure 1: Push button modules Universal – front view

(1) Status LED
(2) Operation LED

3 System information

This device is a product of the KNX system and complies with the KNX directives. Detailed technical knowledge obtained in KNX training courses is a prerequisite for proper understanding.

The function of the device depends on the software. Detailed information on software versions and the respective scope of functions as well as the software itself can be obtained from the manufacturer’s product database.

The device can be updated. Firmware can be easily updated with the Jung ETS Service App (additional software).

The device is KNX Data Secure capable. KNX Data Secure offers protection against manipulation in building automation and can be configured in the ETS project. Detailed technical knowledge is a prerequisite. A device certificate, which is attached to the device, is required for safe commissioning. During mounting, the device certificate must be removed from the device and stored securely.

Planning, installation and commissioning of the device are carried out with the aid of the ETS, version 5.7.7 and higher or 6.0.6.

4 Intended use

Intended use

- Operation of loads, e.g. light on/off, dimming, blinds up/down, brightness values, temperatures, calling up and saving light scenes, etc.
- Mounting in appliance box with dimensions according to DIN 49073

5 Product characteristics

- The push-button sensor functions switching, dimming, controlling blinds, value transmitter, calling up moods, etc.
- One or two functions per button
- Completion with set of buttons (Accessory)
- Illuminable inscription panel
- One status LED per button – red, green or blue adjustable
- One operation LED as an orientation light and to indicate the programming status – red, green or blue adjustable
- Brightness of status LED, operation LED and labelling field adjustable; switchable while in operation, e.g. during the night
- Measurement of the room temperature
- Extension for room temperature controller
- Disabling function: Disable or function switch-over of all or of individual push-button functions
- Alarm function, optionally with confirmation by pressing any button
- Energy saving mode
- Integrated bus coupling unit
- Connection for a push-button sensor extension module, for expansion with up to four additional buttons

Energy saving mode

The device switches to the energy saving mode after a preset time or by an external telegram. In energy saving mode all LED functions are switched off. The device leaves the energy saving mode – depending on programming – on operation or by an external telegram.

i Operations from the energy saving mode are executed immediately.

6 Operation

The operation of functions or electrical consumers can be set individual for each device. Two operating modes are used:

– Single-area operation (button function):
Switching on or off, e.g. of lighting, takes place alternately when the button is pressed repeatedly.

– Dual-area operation (rocker function):
Two buttons next to each other form a function pair. Pressing the left button, for example, switches or dims lighting on or brighter, pressing the right one switches it off or makes it darker.

Operating a function or load

- Switch: Short press on button.
- Dim: Long press on button.
- Move Venetian blind: Long press on button.
- Stop or adjust Venetian blind: Short press on button.
- Call up light scene: Short press on button.
- Save light scene: Long press on button.
- Set value, e.g. brightness or temperature setpoint: Short press on button.
- Adjusting value: Press button for a long time.

i Depending on programming, a button triggers several functions after a longer press or triggers another function if opposite buttons are pressed simultaneously.

7 Information for electrically skilled persons

DANGER!

Electric shock when live parts are touched.

Electric shocks can be fatal.

Cover up live parts in the installation environment.

Mounting and connecting the device

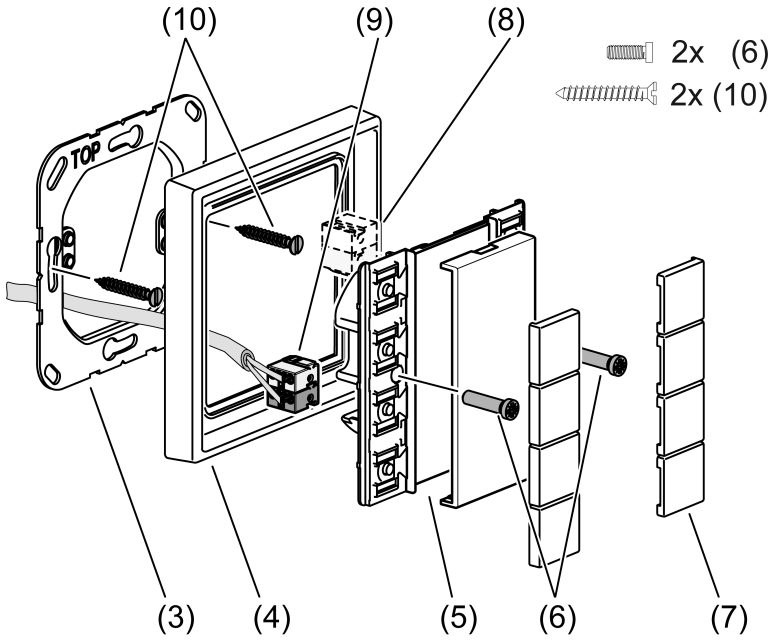

Figure 2: Installation of Universal push-button sensor module

(3) Supporting frame
(4) Frame
(5) Push-button sensor module
(6) Plastic screws (not included in the scope of delivery)
(7) Buttons
(8) Connection of the extension module (optional)
(9) KNX device connection terminal
(10) Can screws (not included in scope of delivery)

DANGER!

Danger of electrical shock!

When mounting with 230 V socket outlets under a common cover there is a danger of electrical shocks in the event of a fault!

Use only the plastic screws for fastening to the supporting frame!

- Mount supporting frame (3) in the right orientation on an appliance box. Note marking **TOP**. Use box screws (10) (see accessories).
- Push frame (4) onto supporting frame.
- Connect the push-button sensor module (5) to the KNX with the KNX device connection terminal (9) and push onto the supporting frame.
- Optional: Fix the push-button sensor module to supporting frame using plastic screws (6) (see accessories). Tighten the plastic screws only lightly.
- Before mounting the buttons (7), load the physical address into the device.

The device should be used in an air-tight appliance box. Drafts cause incorrect temperature values to be measured.

7.1 Commissioning

Preconditions in secure operation

- Secure commissioning has been activated in the ETS.
- Device certificate entered/scanned or added to the ETS project. A high resolution camera should be used to scan the QR code.
- Document all passwords and keep them safe.

Programming the physical address and application program

Project design and commissioning with ETS version 5.7.7 and higher or 6.0.6.

The device is connected and ready for operation.

If the device contains no – or an incorrect – application program, the labelling field and the operation LED flash slowly.

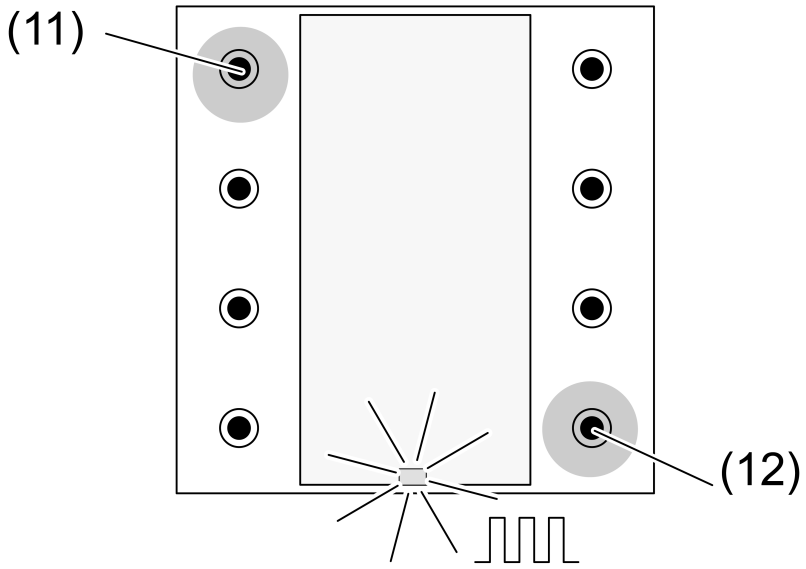

Figure 3: Activating programming mode

- Activate programming mode: Press and hold push-button at the upper left (11). Then press push-button at the lower right (12).

  The operation LED flashes quickly.

- Programming the physical address.

  The operation LED returns to its previous state – off, on, or flashing slowly.

- Programming the application program.

Mounting the buttons

The buttons are available as a complete set of buttons (see accessories).

- Place the buttons on the device in the correct orientation and snap in with a short push.

7.1.1 Safe-state mode

The safe-state mode stops the execution of the loaded application program.

If the device does not work properly - for instance as a result of errors in the project design or during commissioning - the execution of the loaded application program can be halted by activating the safe-state mode. The device remains passive in safe-state mode, since the application program is not being executed (state of execution: terminated).

Only the system software of the device is still functional. ETS diagnosis functions and programming of the device are possible.

Activating safe-state mode

- Switch off the bus voltage.
- Press and hold down the top left and bottom right button.
- Switch on the bus voltage.

  Safe-state mode is activated. The operation LED flashes slowly (approx. 1 Hz).

Do not release the buttons until the operation LED flashes.

Deactivating safe-state mode

- Switch off the voltage or carry out ETS programming.

7.1.2 Master reset

The master reset restores the basic device settings (physical address 15.15.255, firmware remains in place). The device must then be recommissioned with the ETS.

In secure operation: A master reset deactivates device security. The device can then be recommissioned with the device certificate.

If the device - for instance as a result of errors in the project design or during commissioning - does not work properly, the loaded application program can be deleted from the device by performing a master reset. The master reset resets the device to delivery state. Afterwards, the device can be put into operation again by programming the physical address and application program.

Performing a master reset

Precondition: The safe-state mode is activated.

- Press and hold the button at the top left and the button at the bottom right for more than five seconds until the operation LED flashes quickly (approx. 4 Hz).
- Release the buttons.

The device performs a master reset.

The device restarts. The operation LED flashes slowly.

Resetting the device to its default settings

Devices can be reset to factory settings with the ETS Service App. This function uses the firmware contained in the device that was active at the time of delivery (delivery state). Restoring the factory settings causes the devices to lose their physical address and configuration.

8 Flashing frequencies of the LEDs

State of operation	Operation LED	Status LED
Application discharged	Approx. 0.75 Hz (blue)	With On button pressed (red, green, blue)
Safe-state mode	Approx. 1 Hz (blue)	---
Flashing status *)	Approx. 2 Hz	Approx. 2 Hz
Alarm signal *)	Approx. 2 Hz (red)	Approx. 2 Hz (red)
Master reset	Approx. 4 Hz (red)	---
Programming mode	Approx. 8 Hz (blue)	---
Full-surface operation	---	Approx. 8 Hz

*) The labelling field is also activated with approx. 2 Hz.

9 Technical data

KNX

KNX medium	TP256
Safety	KNX Data Secure (X-mode)
Commissioning mode	S mode
Rated voltage KNX	DC 21 ... 32 V SELV
Current consumption KNX	
without TSEM	Max. 12 mA
with TSEM	Max. 20 mA
Connection mode KNX	Device connection terminal
Ambient temperature	-5 ... +45 °C
Storage/transport temperature	-25 ... +70 °C
Protection class	III

Connection of the extension module

Number	1
Cable length	Max. 30 m
Cable type	J-Y(St)Y 2×2×0.8

10 Accessories

Cover kit 1-gang	..501 TSA..
Cover kit 2-gang	..502 TSA..
Cover kit 3-gang	..503 TSA..
Cover kit 4-gang	..504 TSA..
Push-button extension module, 1-gang	..5091TSEM
Push-button extension module, 2-gang	..5092TSEM
Push-button extension module, 3-gang	..5093TSEM
Push-button extension module, 4-gang	..5094TSEM
Screw assortment sensors	S-BOXTSMRTZN
Screws sensor module	S-NFBTSMRT
Screws supporting frame	S-NFBTSMZN

11 Warranty

The warranty is provided by the specialist trade in accordance with statutory requirements.

ALBRECHT JUNG GMBH & CO. KG
Volmestraße 1
58579 Schalksmühle
GERMANY

Telefon: +49 2355 806-0
Telefax: +49 2355 806-204
kundencenter@jung.de
www.jung.de