Cover kit, F50, thermoplastic, AS/A range, white

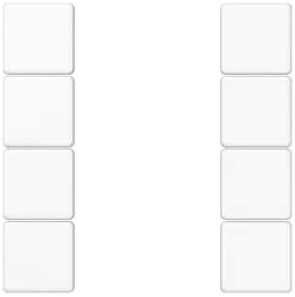

Reference number:	A 504 TSA WW
EAN/GTIN:	4011377107519
Color:	white
Material:	thermoplastic

Individual colour printing possible
Individual laser engraving possible

Thermoplastic (breakproof) high-gloss
to clip on F 50 push-button modules 4-gang of the AS/A range
ref.-no.: A 5074 TSM, A 5294 1ST, A 5094 TSEM, A 5294 D 1ST, A 5074 RF TSM, A 5248 TSM, FM A 5004 M

Cradle to Cradle certified

Dimensions

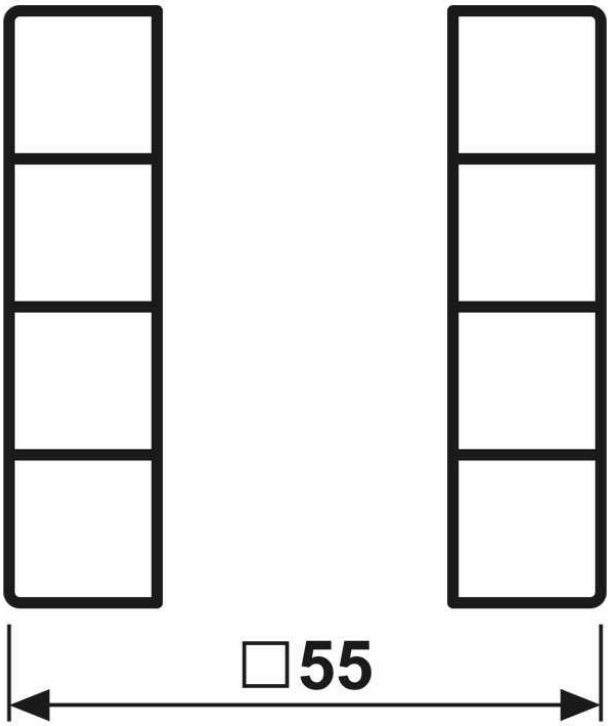

ALBRECHT JUNG GMBH & CO. KG
Volmestraße 1
58579 Schalksmühle

Phone +49 (0) 23 55/80 60
E-Mail kundencenter@jung.de

Assembly

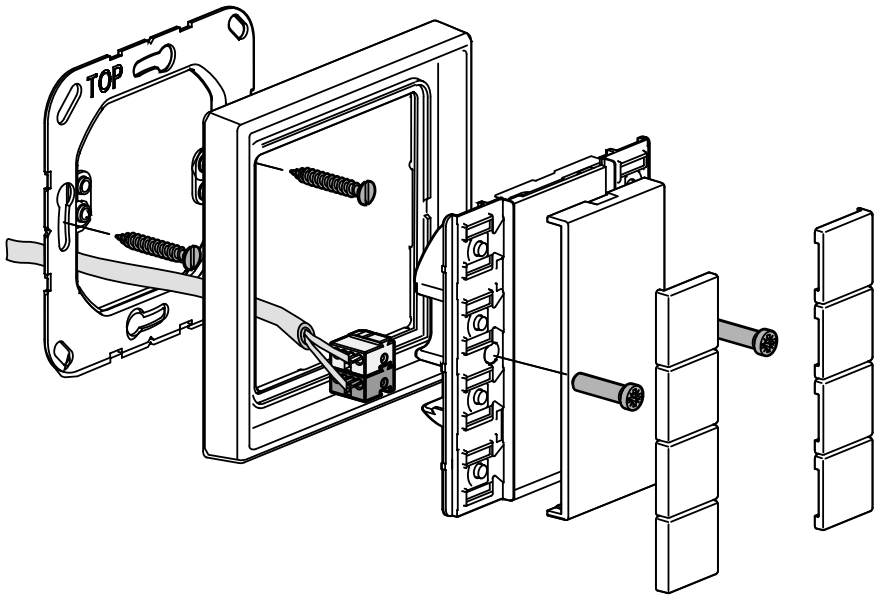

ALBRECHT JUNG GMBH & CO. KG | Volmestraße 1 | 58579 Schalksmühle | GERMANY 09/2022