Cover kit, F50, thermoplastic, AS/A range, white

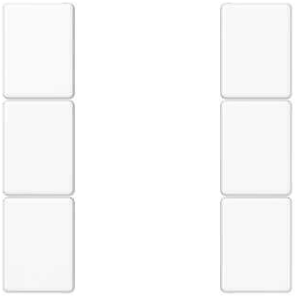

Reference number:	A 503 TSA WW
EAN/GTIN:	4011377104518
Color:	white
Material:	thermoplastic

Individual colour printing possible
Individual laser engraving possible

Thermoplastic (breakproof) high-gloss
to clip on F 50 push-button modules 3-gang of the AS/A range
ref.-no.: A 5073 TSM, A 5293 IST, A 5093 TSEM, A 5073 RF TSM, A 5236 TSM, FM A 5003 M, SI TM A 5073, SI TM A 5093

Cradle to Cradle certified

Dimensions

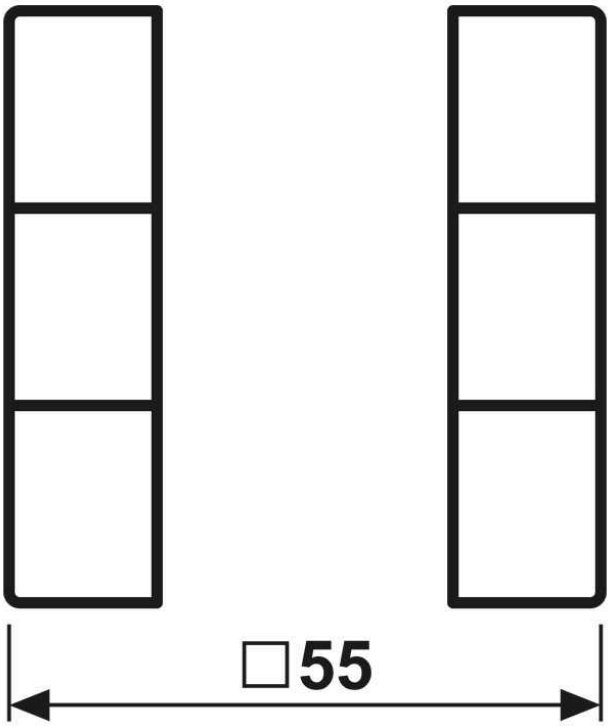

ALBRECHT JUNG GMBH & CO. KG
Volmestraße 1
58579 Schalksmühle

Phone +49 (0) 23 55/80 60
E-Mail kundencenter@jung.de

Assembly

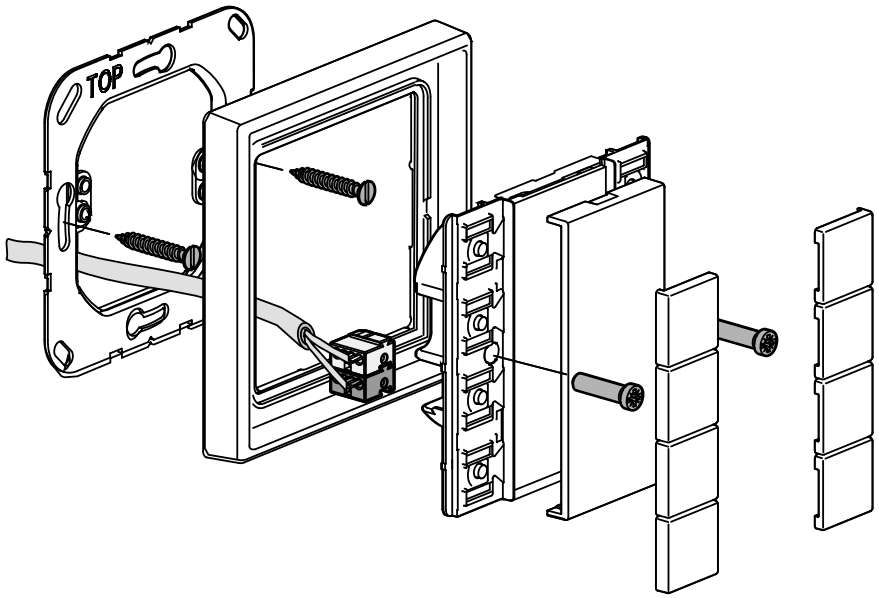

ALBRECHT JUNG GMBH & CO. KG | Volmestraße 1 | 58579 Schalksmühle | GERMANY 09/2022