Push-button module 24 V AC/DC, 20 mA, 1-channel, 2 contacts, F50, AS/A range



Reference number:	A 5212 TSM
EAN/GTIN:	4011377118072

Individual inscription of paper inlays for incription fields possible

including transparent cover ref.-no.: A 50 NA

F 50 Push-button modules for connection to relay station ref.-no. RS 8 REGHE, dimming station ref.-no. UDS 4 REGHE or other control systems with control voltage of max. 24 V AC/DC (SELV), 20 mA.
The module is connected by means of a connection block at the back.
- To be completed with cover kit
- One red status LED per button

Spare part:
Spare part:
Transparent cover ref.-no.: A 50 NA

Accessories:
Accessories:
Neutral cover ref.-no.: A 50 NA W, A 50 NA WW, A 50 NA SW, A 50 NA AL, A 50 NA CH, A 50 NA MO, A 50 NA WWM, A 50 NA SWM, A 50 NA ANM
Cover, suitable for backlighting ref.-no.: A 50 NA TX SW-L

In combination with the PHC system of the company PEHA the proper functioning of the status LED cannot be guaranteed. Please contact our technical service line.

ALBRECHT JUNG GMBH & CO. KG
Volmestraße 1
58579 Schalksmühle
Phone +49 (0) 23 55/80 60
E-Mail kundencenter@jung.de

Dimensions

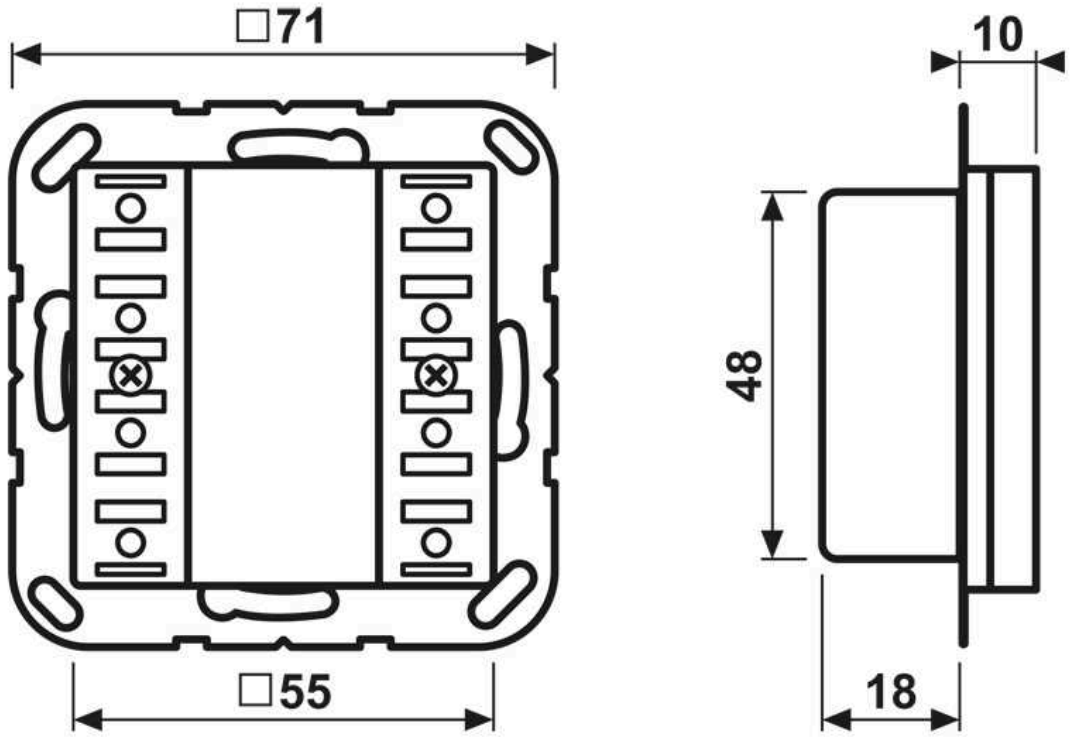

ALBRECHT JUNG GMBH & CO. KG
Volmestraße 1
58579 Schalksmühle

Phone +49 (0) 23 55/80 60
E-Mail kundencenter@jung.de

Assembly

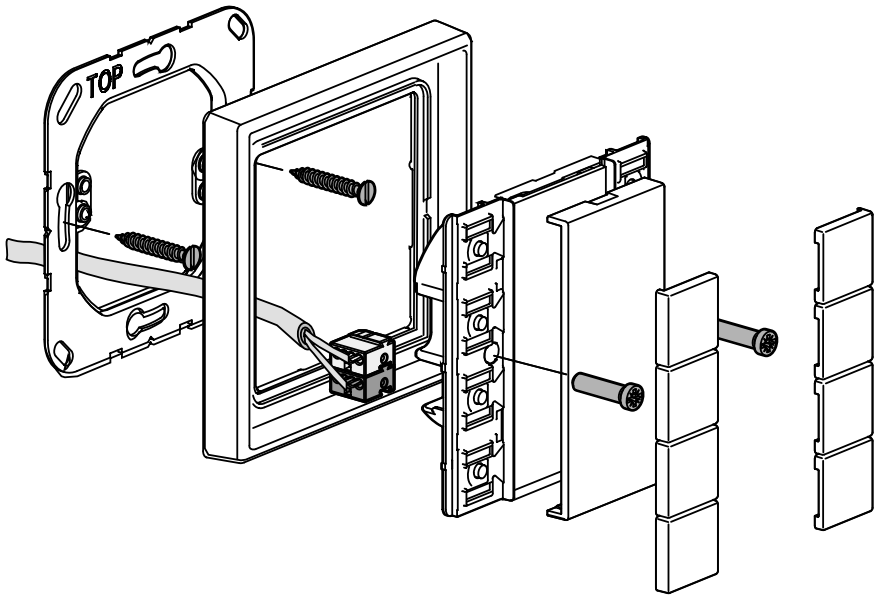

ALBRECHT JUNG GMBH & CO. KG | Volmestraße 1 | 58579 Schalksmühle | GERMANY 09/2022