Friends of Hue radio transmitter set, 4-channel, thermoplastic, LS range, white

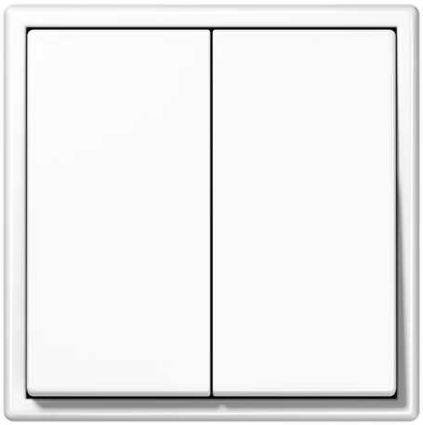

Reference number:	FOHS LS 995 WW
EAN/GTIN:	4011377191501
Color:	white
Material:	thermoplastic

Individual colour printing possible
Individual laser engraving possible

Battery-free by EnOcean

works with hue

Thermoplastic (breakproof) high-gloss
4-channel
max. 4 light scenes
including mounting plate, adhesive film and retaining screw
including LS 990 frame ref.: LS 981 ..

- Smart switch for wireless remote control of Philips Hue lamps
- For switching, dimming and controlling individual light scenes
- For residential use only
- Mounting on flush box with dimensions according to DIN 49073, screw fixing on walls or adhesive fixing on smooth, even surfaces (glass)
- Battery-free device without external power supply
- Transmitting energy is generated from mechanical energy of actuation (energy harvesting)
- Encrypted transmission with device-specific code
- Wireless standard ZigBee Green Power, compatible with Friends of Hue and Apple HomeKit
- Automatic range extension via Philips Hue lamps
- Simple commissioning and configuration via Philips Hue app and Hue Bridge V2 or higher

Technical data

Radio frequency:	2.402 ... 2.480 GHz
Transmission range	
in free field:	up to 175 m
in buildings:	approx. 20 m
Transmitting power:	7 dBm / 5 mW
Ambient temperature:	-5 ... +45 °C
Storage/transport temperature:	-25 ... +65 °C
Atmospheric humidity:	0 ... 95 % (no condensation)

ALBRECHT JUNG GMBH & CO. KG
Volmestraße 1
58579 Schalksmühle
Phone +49 (0) 23 55/80 60
E-Mail kundencenter@jung.de

Dimensions

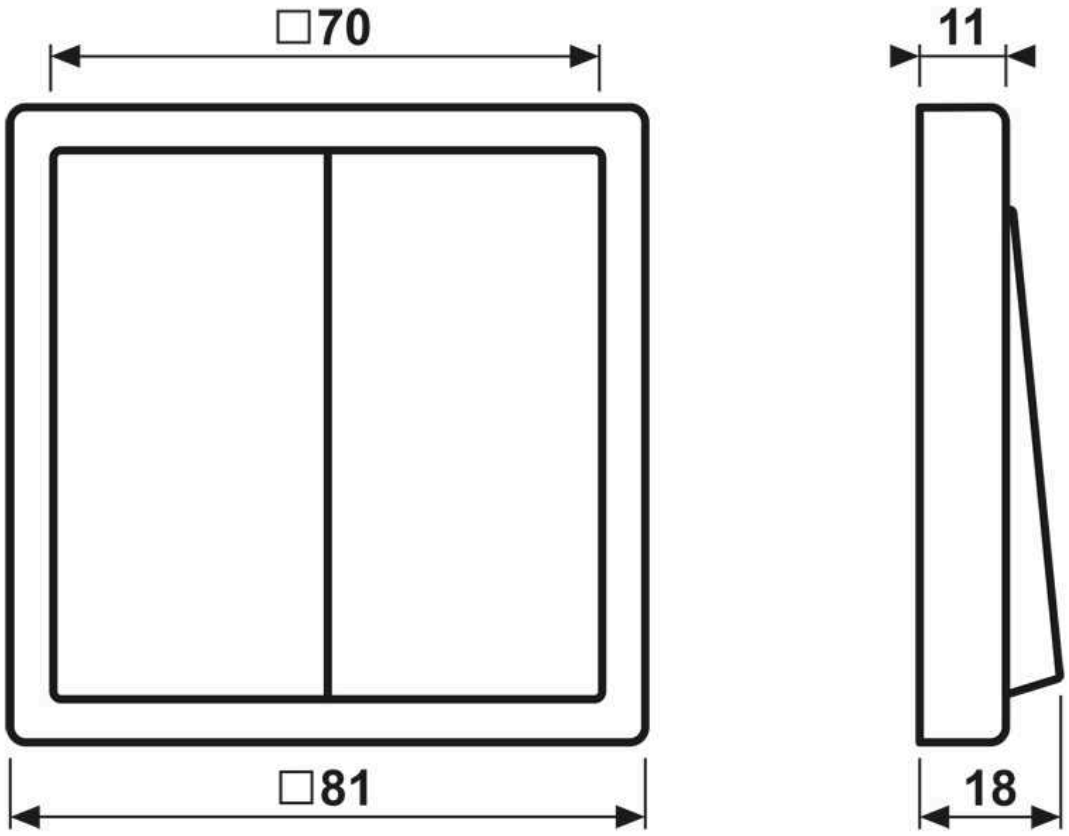

ALBRECHT JUNG GMBH & CO. KG
Volmestraße 1
58579 Schalksmühle

Phone +49 (0) 23 55/80 60
E-Mail kundencenter@jung.de

Assembly

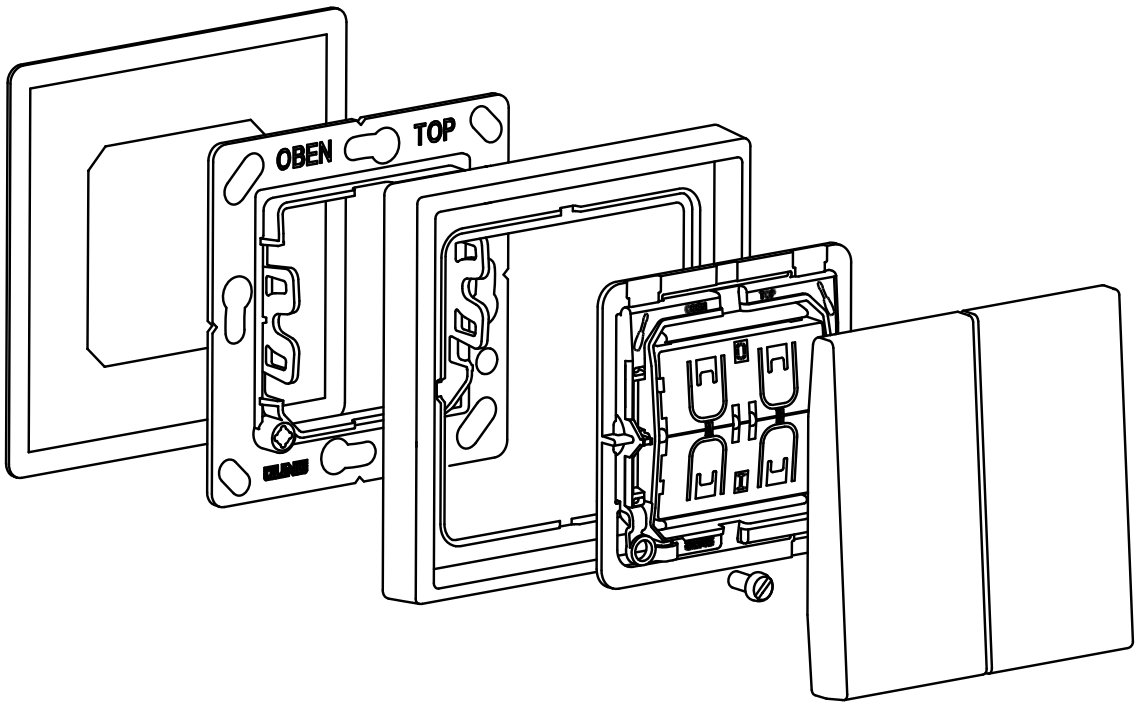

ALBRECHT JUNG GMBH & CO. KG | Volmestraße 1 | 58579 Schalksmühle | GERMANY 06/2022