Glass frame 2-gang, A CREATION, champagne, vertical and horizontal installation



Reference number:	AC 582 GL CH
EAN/GTIN:	4011377094864
Version:	2-gang
Dimensions:	84 mm x 155 mm
Color:	champagne
Material:	glass

champagne
for horizontal and vertical installation
for A range

Labelling is possible with labelling kit ref.-no. AC 80 NAS

Labelling option:
Labelling kit ref.-no.: AC 80 NAS
Adhesive labelling field ref.-no.: AC 80 NA

Dimensions

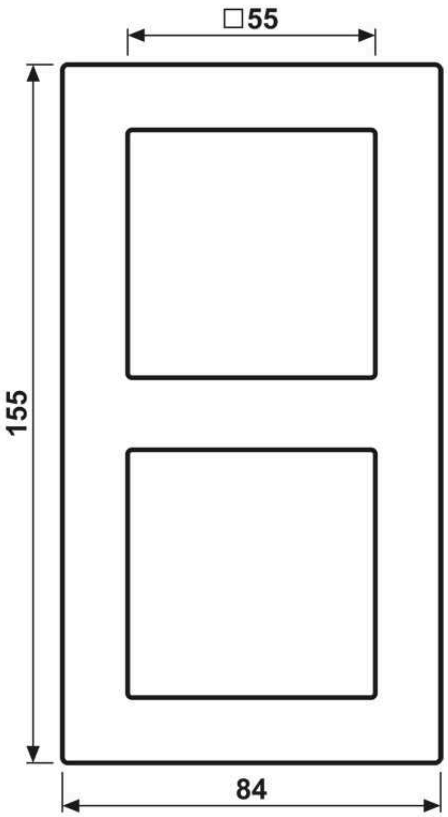

ALBRECHT JUNG GMBH & CO. KG
Volmestraße 1
58579 Schalksmühle

Phone +49 (0) 23 55/80 60
E-Mail kundencenter@jung.de

Assembly

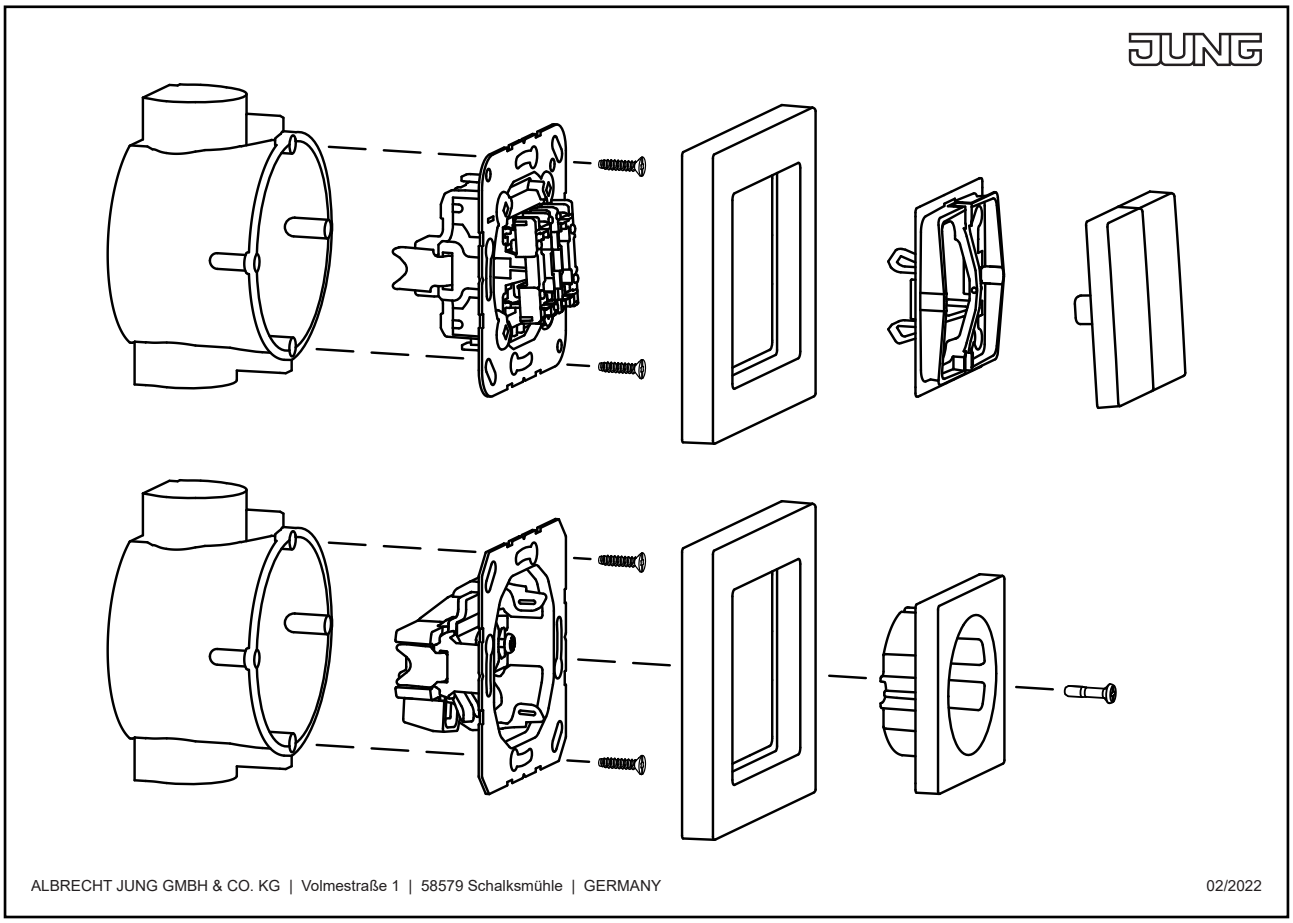
ALBRECHT JUNG GMBH & CO. KG | Volmestraße 1 | 58579 Schalksmühle | GERMANY
02/2022