Centre plate for USB charger, thermoplastic lacquered, A range, matt graphite black

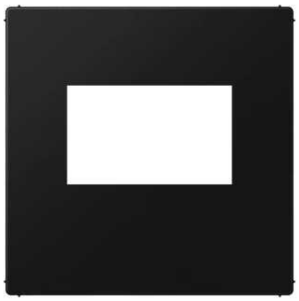

Reference number:	A 1569 USB SWM
EAN/GTIN:	4011377186279
Color:	matt graphite black
Material:	thermoplastic

Individual colour printing possible

matt lacquered
for USB charger ref.-no.: USB 15 CA WW, USB 15 CA SW, USB PD60 C WW, USB PD60 C SW

Dimensions

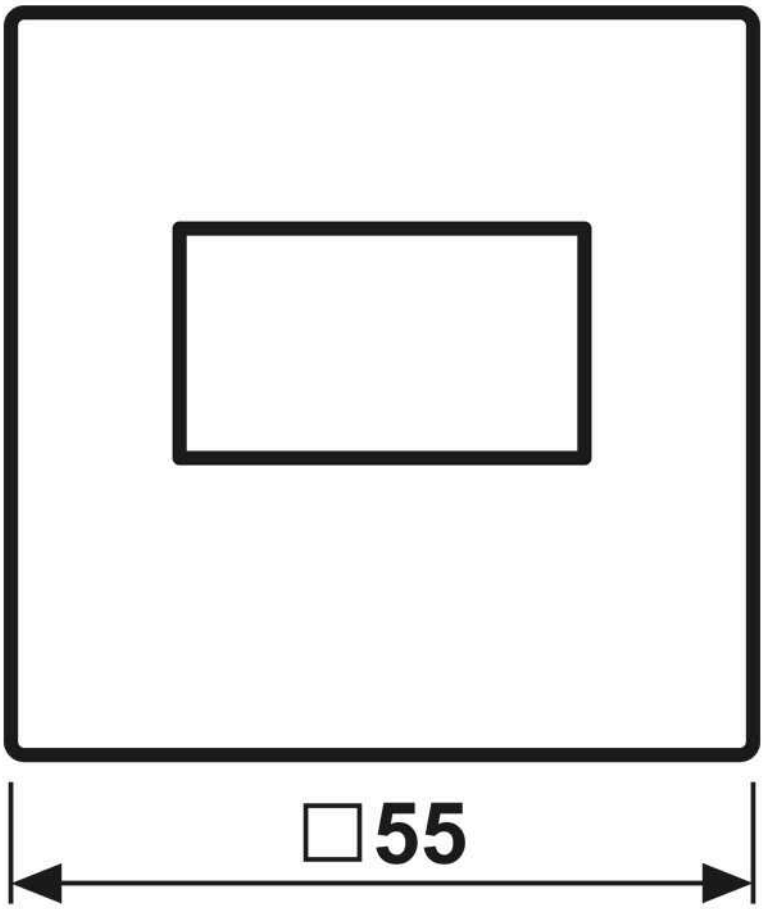

ALBRECHT JUNG GMBH & CO. KG
Volmestraße 1
58579 Schalksmühle

Phone +49 (0) 23 55/80 60
E-Mail kundencenter@jung.de

Assembly

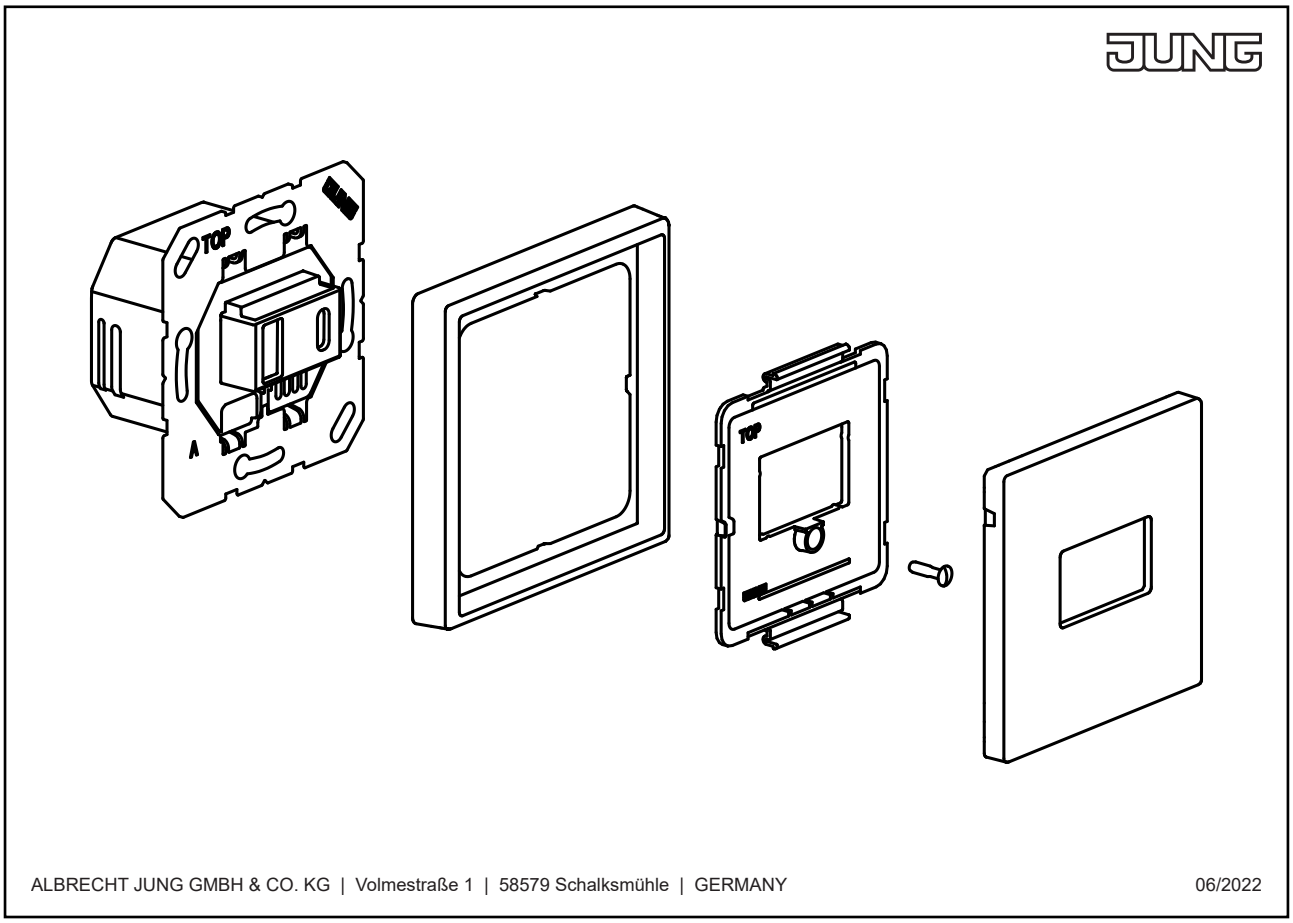
TOP
A
TOP
ALBRECHT JUNG GMBH & CO. KG | Volmestraße 1 | 58579 Schalksmühle | GERMANY
06/2022