LB Management push-button 2-gang, thermoplastic lacquered, A range, matt graphite black



Reference number:	A 1702 BF SWM
EAN/GTIN:	4011377187719
Color:	matt graphite black
Material:	thermoplastic

Individual colour printing possible

matt lacquered
for inserts "light" ref.-no.: 1702 SE, 1712 DE, 1713 DSTE, 1723 NE

Intended use
- Manual operation of lighting
- Operation with 2-channel system insert for switching and dimming, with DALI push-button controller or with satellite insert 3-wire

Product characteristics
- Switching, dimming and colour temperature setting of lighting, with switch or dimmer insert
- Full control of switch and dimming inserts, with satellite insert 3-wire
- Switch-on brightness of lighting can be saved, with dimmer insert and DALI push-button controller
- Colour temperature can be saved, with DALI push-button controller

A labelling request in the GRAPHIC TOOL must be submitted together with the order: jung.group/gt
Subsequent labelling of the buttons is not possible.

Dimensions

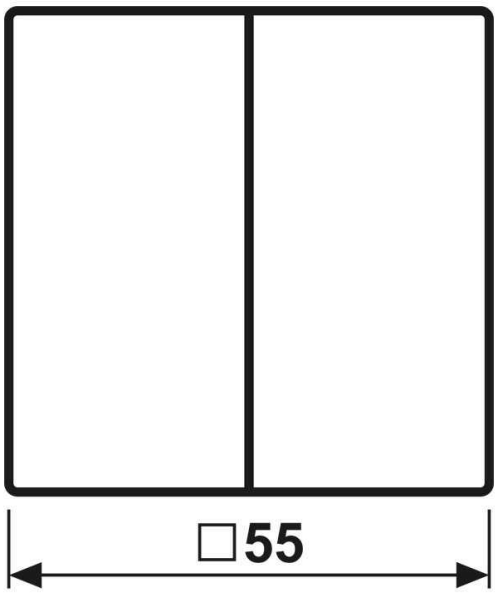

ALBRECHT JUNG GMBH & CO. KG
Volmestraße 1
58579 Schalksmühle

Phone +49 (0) 23 55/80 60
E-Mail kundencenter@jung.de

Assembly

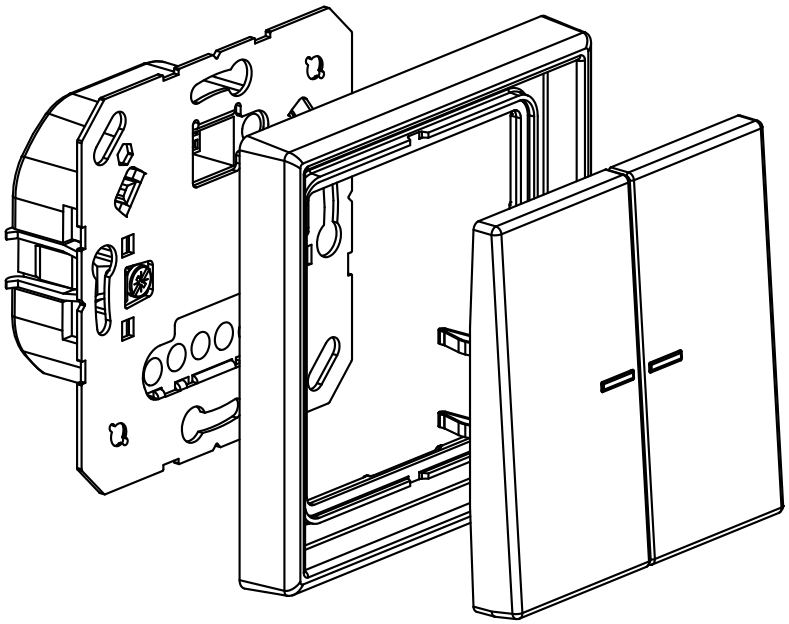

ALBRECHT JUNG GMBH & CO. KG | Volmestraße 1 | 58579 Schalksmühle | GERMANY 01/2023

ALBRECHT JUNG GMBH & CO. KG
Volmestraße 1
58579 Schalksmühle
Phone +49 (0) 23 55/80 60
E-Mail kundencenter@jung.de