LB Management push-button 1-gang, thermoplastic lacquered, A range, matt graphite black



Reference number:	A 1700 BF SWM
EAN/GTIN:	4011377187917
Color:	matt graphite black
Material:	thermoplastic

Individual colour printing possible

matt lacquered
for inserts "blinds" ref.-no.: 1730 JE and 1731 JE
for inserts "light" ref.-no.: 1701 SE, 1701 PSE, 1704 ESE, 1702 SE, 1710 DE, 1711 DE, 1713 DSTE, 1720 NE, 1723 NE, 1708 IE

Intended use
- Manual operation of Venetian blinds, shutters, awnings or lighting
- Operation with system insert for switching, dimming, blind, with pulse insert or satellite insert 3-wire

Product characteristics
- Activation of Venetian blinds, shutters, awnings, with blinds insert
- Switching and dimming of lighting, with switch / dimmer or pulse insert
- Ventilation position of the blind/shutter can be saved, with blinds insert
- Switch-on brightness of lighting can be saved, with dimmer insert and DALI push-button controller

A labelling request in the GRAPHIC TOOL must be submitted together with the order: jung.group/gt
Subsequent labelling of the buttons is not possible.

ALBRECHT JUNG GMBH & CO. KG
Volmestraße 1
58579 Schalksmühle
Phone +49 (0) 23 55/80 60
E-Mail kundencenter@jung.de

Dimensions

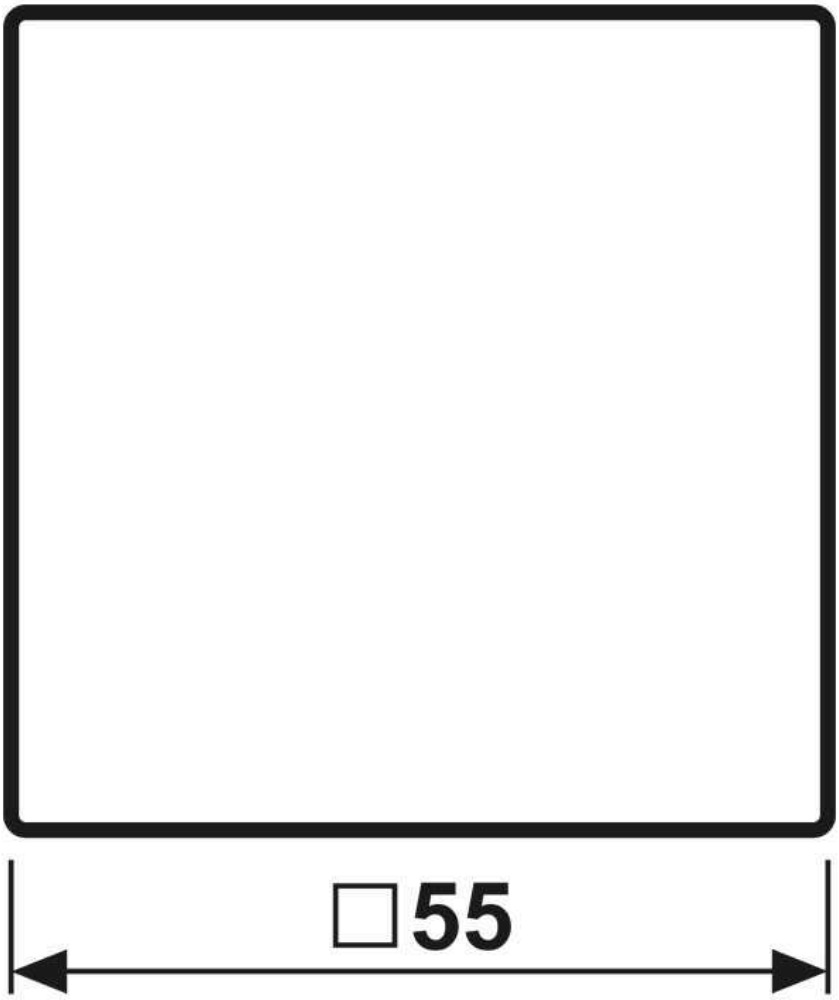

ALBRECHT JUNG GMBH & CO. KG
Volmestraße 1
58579 Schalksmühle

Phone +49 (0) 23 55/80 60
E-Mail kundencenter@jung.de

Assembly

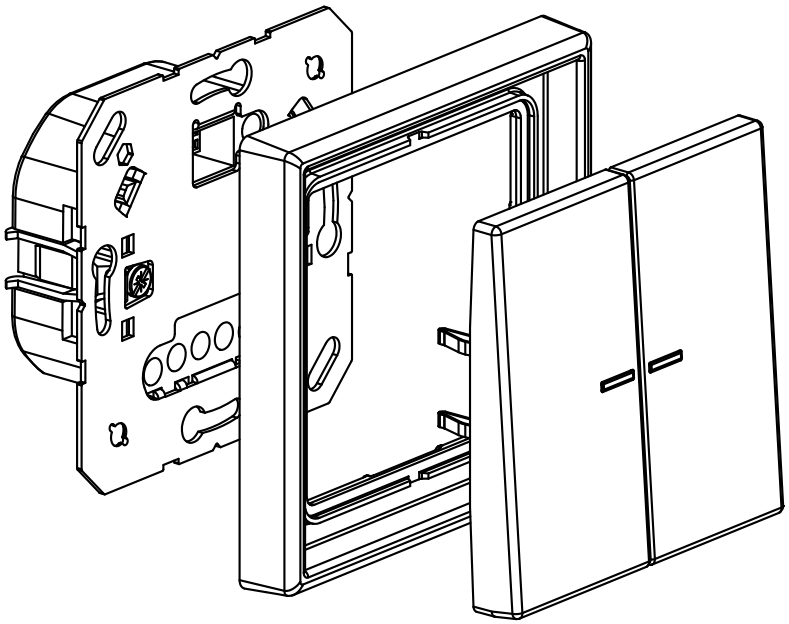

ALBRECHT JUNG GMBH & CO. KG | Volmestraße 1 | 58579 Schalksmühle | GERMANY 01/2023