Surface cap 3-gang, A CUBE, thermoplastic lacquered, matt snow white, vertical and horizontal installation



Reference number:	A 5583 BF A WWM
EAN/GTIN:	4011377212145
Version:	3-gang
Color:	matt snow white
Material:	thermoplastic

Individual colour printing possible

matt lacquered
with integrated frame and non-flammable ground plate
for inserts with covers of the A range (except key switches ref.-no. ..15, 3-level-switch and socket for Switzerland type 13)
227 x 85 x 47 mm
Installation depth max. 34 mm

Spare part:
Spare part:
mounting box ref.-no.: 583 A

Dimensions

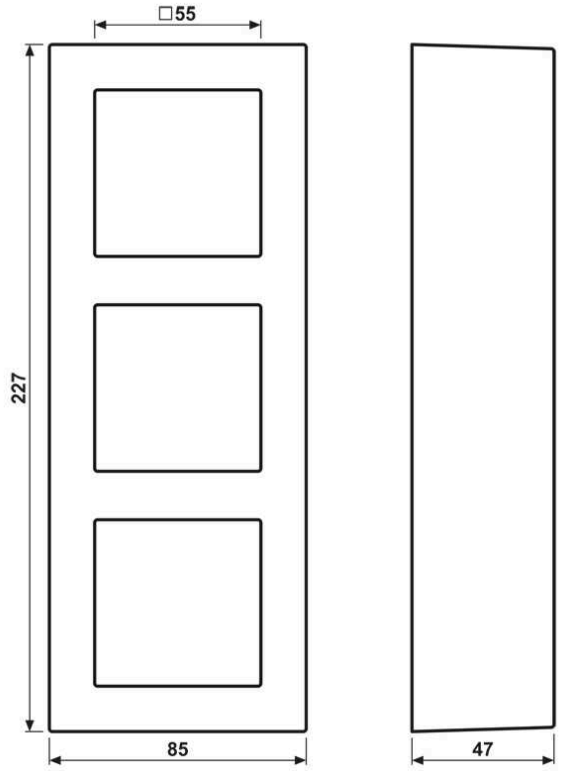

ALBRECHT JUNG GMBH & CO. KG
Volmestraße 1
58579 Schalksmühle

Phone +49 (0) 23 55/80 60
E-Mail kundencenter@jung.de

Assembly

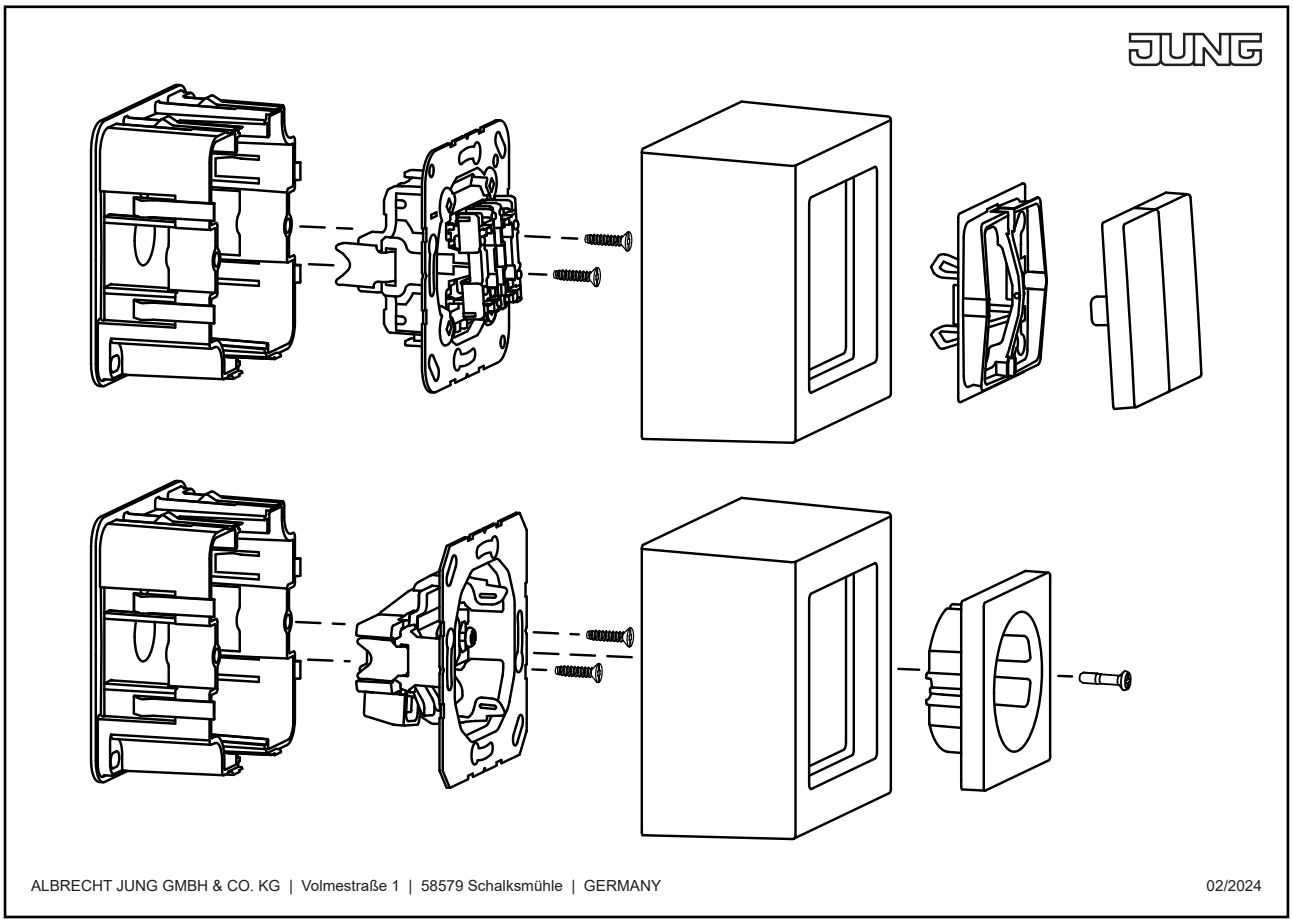
ALBRECHT JUNG GMBH & CO. KG | Volmestraße 1 | 58579 Schalksmühle | GERMANY
02/2024