Frame 5-gang, A 550, thermoplastic lacquered, matt snow white, vertical and horizontal installation



Reference number:	A 5585 BF WWM
EAN/GTIN:	4011377190757
Version:	5-gang
Dimensions:	85 mm x 369 mm
Color:	matt snow white
Material:	thermoplastic

Individual colour printing possible

Thermoplastic (breakproof) lacquered
matt snow white
for horizontal and vertical installation
for A range
1-gang frames also suitable for British Standard installations (supporting frame 80 x 80)

Labelling is possible with labelling kit ref.-no. AC 80 NAS

Labelling option:
Labelling kit ref.-no.: AC 80 NAS
Adhesive labelling field ref.-no.: AC 80 NA

Dimensions

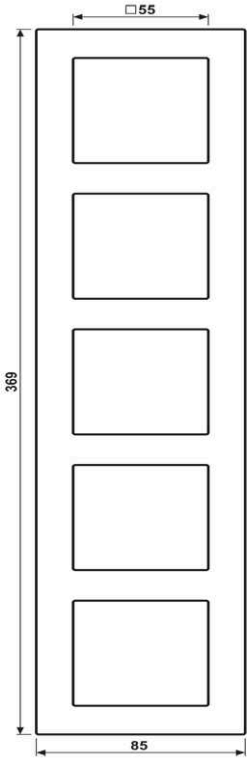

ALBRECHT JUNG GMBH & CO. KG
Volmestraße 1
58579 Schalksmühle

Phone +49 (0) 23 55/80 60
E-Mail kundencenter@jung.de

Assembly

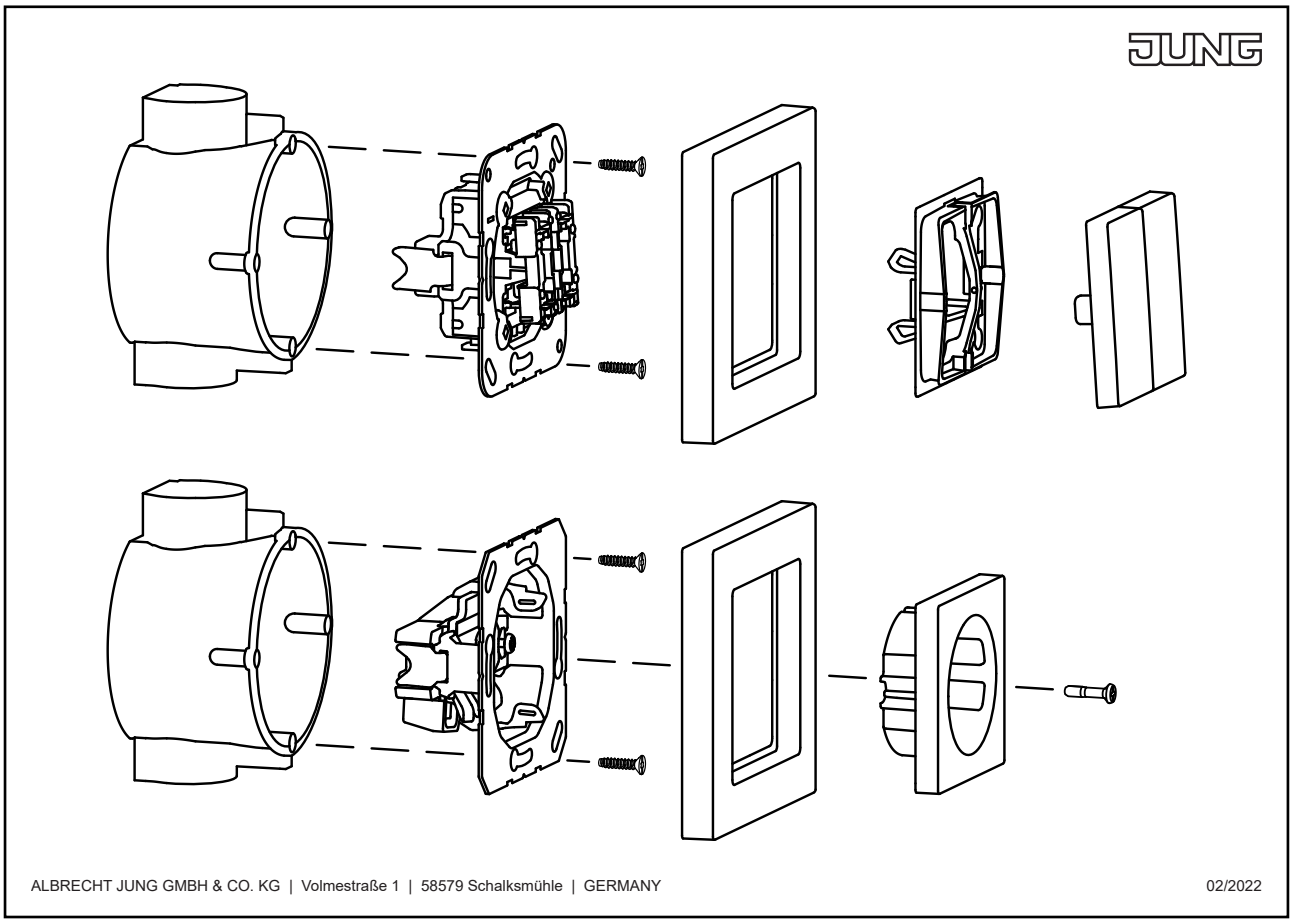
ALBRECHT JUNG GMBH & CO. KG | Volmestraße 1 | 58579 Schalksmühle | GERMANY
02/2022