LB Management motion detector (TIME), Standard, 1.10 m, thermoplastic lacquered, A range, matt snow white



Reference number:	A 17182 WWM
EAN/GTIN:	4011377213104
Color:	matt snow white
Material:	thermoplastic

matt lacquered
Run-on time and brightness threshold adjustable
for inserts "light" ref.-no.: 1701 SE, 1701 PSE, 1704 ESE, 1702 SE, 1710 DE, 1711 DE, 1713 DSTE, 1723 NE, 1708 IE

Intended use
- Automatic switching of lighting depending on the thermal movement and ambient brightness
- Operation with system insert for switching or dimming or satellite insert 3-wire
- Wall installation on system insert

Product characteristics
- Extension of the detection area in combination with 3-wire satellite insert
- Operation with 2-wire or 3-wire satellite insert, rotary satellite insert or push-button
- Switch-on with last brightness or fixed switch-on brightness, with dimming insert
- Switch-on brightness can be saved permanently via satellite unit, with dimmer insert
- Dimming light via satellite unit, with dimmer insert
- Screen for limiting the detection area
- Fixed sensitivity
- Run-on time adjustable
- Brightness threshold adjustable

Technical data

Ambient temperature:	-20 ... +45 °C
Storage/transport temperature:	-25 ... +70 °C
Brightness setting:	approx. 5 ... 1,000 lx (and daytime operation)
Run-on time:	approx. 10 s ... 30 min
Mounting height:	1.10 m
Detection angle:	180°

ALBRECHT JUNG GMBH & CO. KG
Volmestraße 1
58579 Schalksmühle
Phone +49 (0) 23 55/80 60
E-Mail kundencenter@jung.de

Dimensions

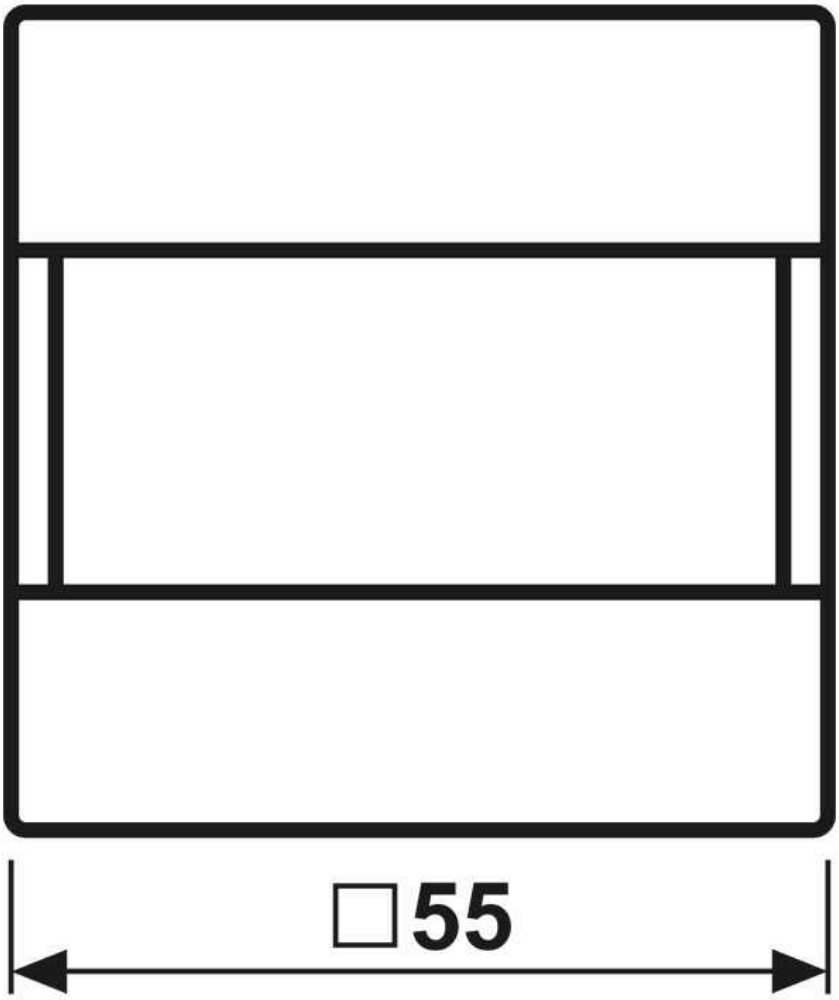

ALBRECHT JUNG GMBH & CO. KG
Volmestraße 1
58579 Schalksmühle

Phone +49 (0) 23 55/80 60
E-Mail kundencenter@jung.de

Assembly

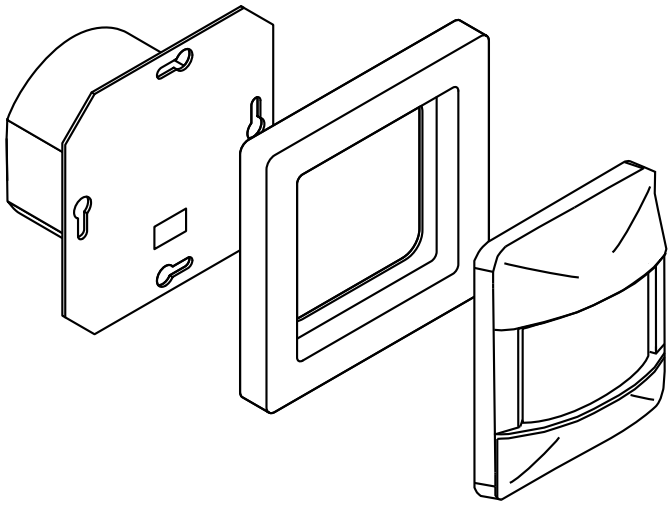

ALBRECHT JUNG GMBH & CO. KG | Volmestraße 1 | 58579 Schalksmühle | GERMANY 01/2023