Centre plate with knob 1-gang, thermoplastic lacquered, A range, matt snow white

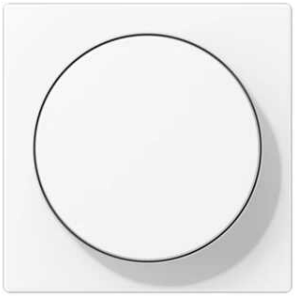

Reference number:	A 1740 BF WWM
EAN/GTIN:	4011377202894
Color:	matt snow white
Material:	thermoplastic

Individual colour printing possible

matt lacquered
for rotary dimmer ref.-no.: 1730 DD, 1731 DD, 1735 DD, 211 GDE
for satellite dimmer ref.-no.: 1733 DNE
for rotary controller 1-10 V ref.-no.: 240-10
for DALI rotary controllers ref.-no.: 1740 DSTE, 1741 DSTE, 1745 DSTE, 1746 DSTE
for speed regulator ref.-no.: 1735 DS

Dimensions

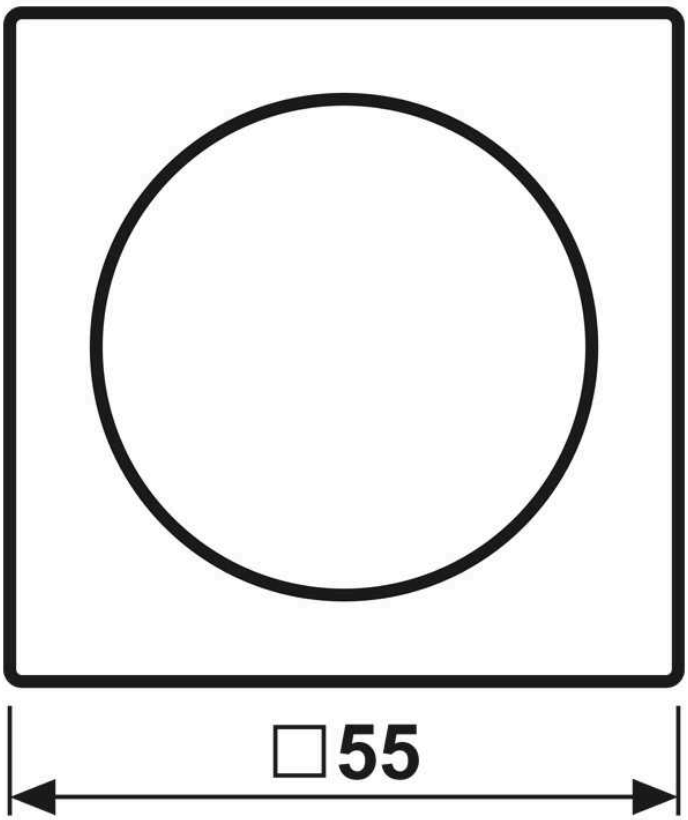

ALBRECHT JUNG GMBH & CO. KG
Volmestraße 1
58579 Schalksmühle

Phone +49 (0) 23 55/80 60
E-Mail kundencenter@jung.de

Assembly

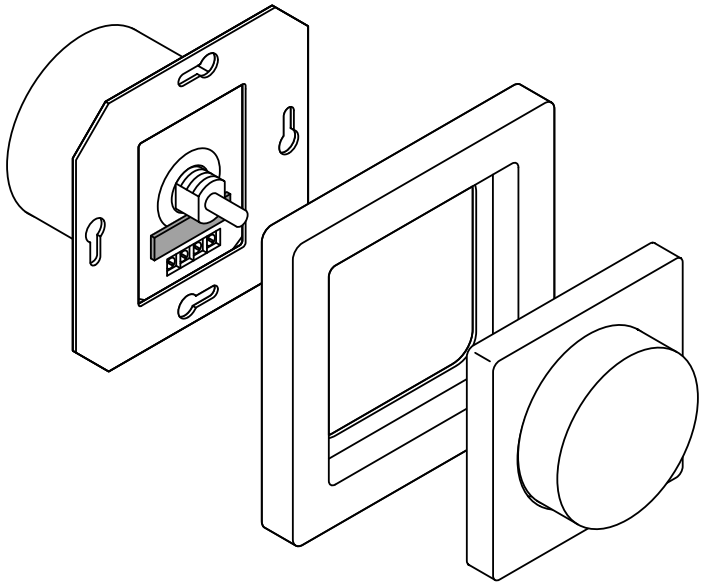

ALBRECHT JUNG GMBH & CO. KG | Volmestraße 1 | 58579 Schalksmühle | GERMANY 02/2023

ALBRECHT JUNG GMBH & CO. KG
Volmestraße 1
58579 Schalksmühle
Phone +49 (0) 23 55/80 60
E-Mail kundencenter@jung.de