Blank centre plate (snap-on fixing), thermoplastic lacquered, A range, matt anthracite



Reference number:	A 594-0 ANM
EAN/GTIN:	4011377129382
Color:	matt anthracite
Material:	thermoplastic

Degree of protection IP44 is ensured with sealing gasket ref.-no. 551 WU and "IP44 frame" of the respective design range.

Individual colour printing possible

matt lacquered
(with supporting frame, screw fixing only)

The cover will be installed with snap-on fixing and enables individual cuttings or drilling holes.

Plastic design cover made from 95% recycled material in accordance with DIN EN ISO 14021 - sustainable, conserves resources

Dimensions

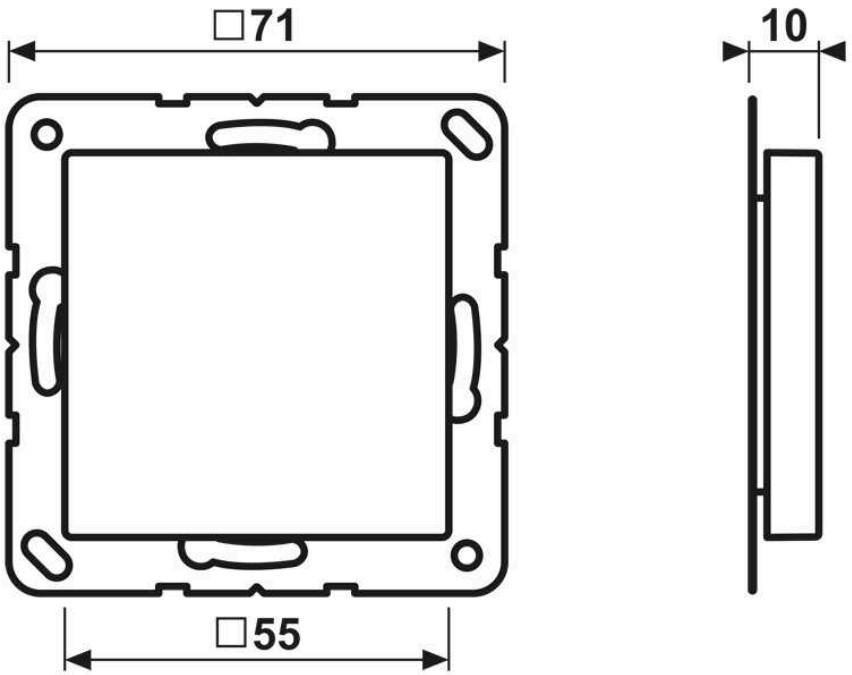

ALBRECHT JUNG GMBH & CO. KG
Volmestraße 1
58579 Schalksmühle

Phone +49 (0) 23 55/80 60
E-Mail kundencenter@jung.de