# Centre plate (snap-on fixing) for modular jack sockets, 1-gang, UMA-CAT6A, RADIALL, Panduit, Assmann, thermoplastic lacquered, A range, matt anthracite

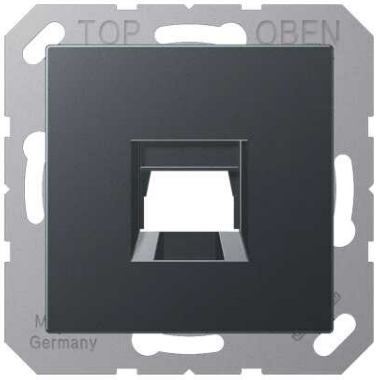


| | |
|---|---|
| **Reference number:** | A 1569-1 WE ANM |
| **EAN/GTIN:** | 4011377177420 |
| **Color:** | matt anthracite |
| **Material:** | thermoplastic |

Individual colour printing possible

**matt lacquered**
(with supporting frame, screw fixing only)
shutter with spring
inner dimensions of keystone mount 15,3 x 19,3 mm
for universal modular jack socket ref.-no.: UMA-CAT6A-25
**for 1 socket**

for modular jack sockets
**RADIALL:**
modular jack unshielded 6P6C, RJ 12, Cat. 4 (ref.-no. R280MOD804)
modular jack unshielded 8P8C, RJ 45, Cat. 4 (ref.-no. R280MOD805)
modular jack unshielded 8P8C, RJ 45, Cat. 5e (ref.-no. R280MOD807)
**Panduit:**
keystone jack KJ 88..
keystone jack KJ 588..
**Assmann:**
module DN-93612 Cat. 6A, shielded, Keystone
module DN-93614
**SCHRACK**
HSPMRJ6G1A, HSEMRJ6GBA, HSEMRJ6GBS, HSEMRJ6GWA, HSEMRJ6GWS, HSEMRJ6UWS

Plastic design cover made from 95% recycled material in accordance with DIN EN ISO 14021 - sustainable, conserves resources

## Dimensions

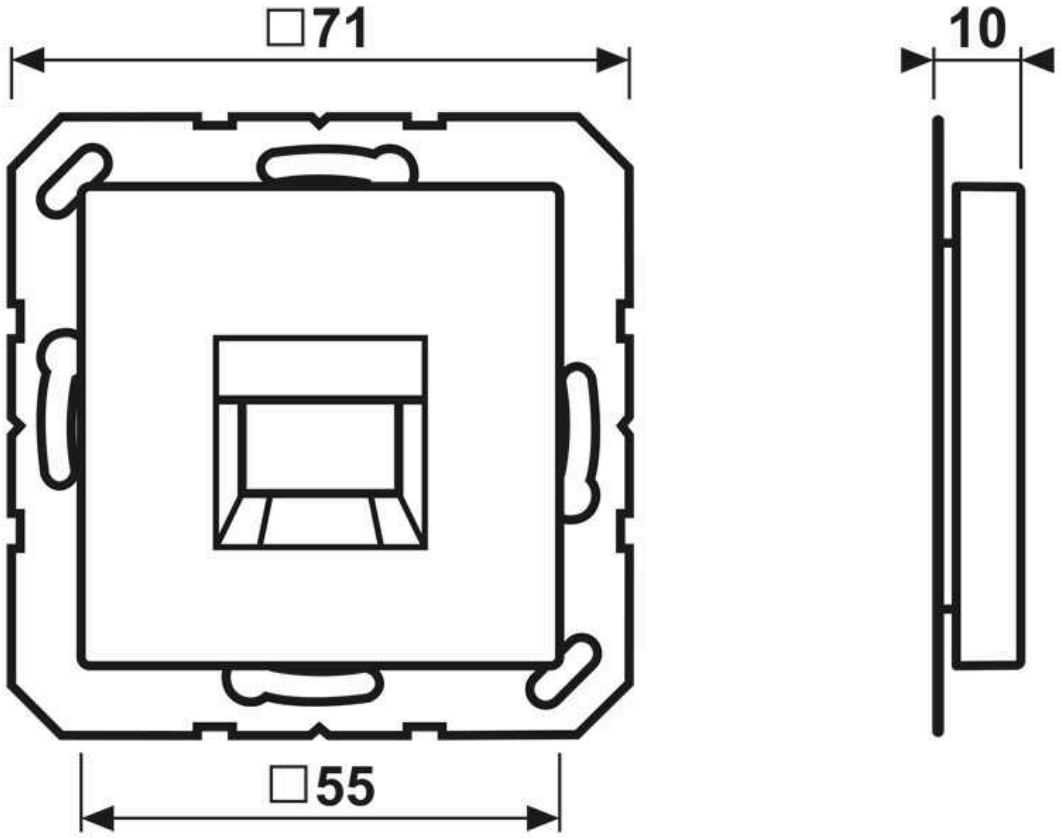


**ALBRECHT JUNG GMBH & CO. KG**
Volmestraße 1
58579 Schalksmühle

Phone +49 (0) 23 55/80 60
E-Mail kundencenter@jung.de

## Assembly

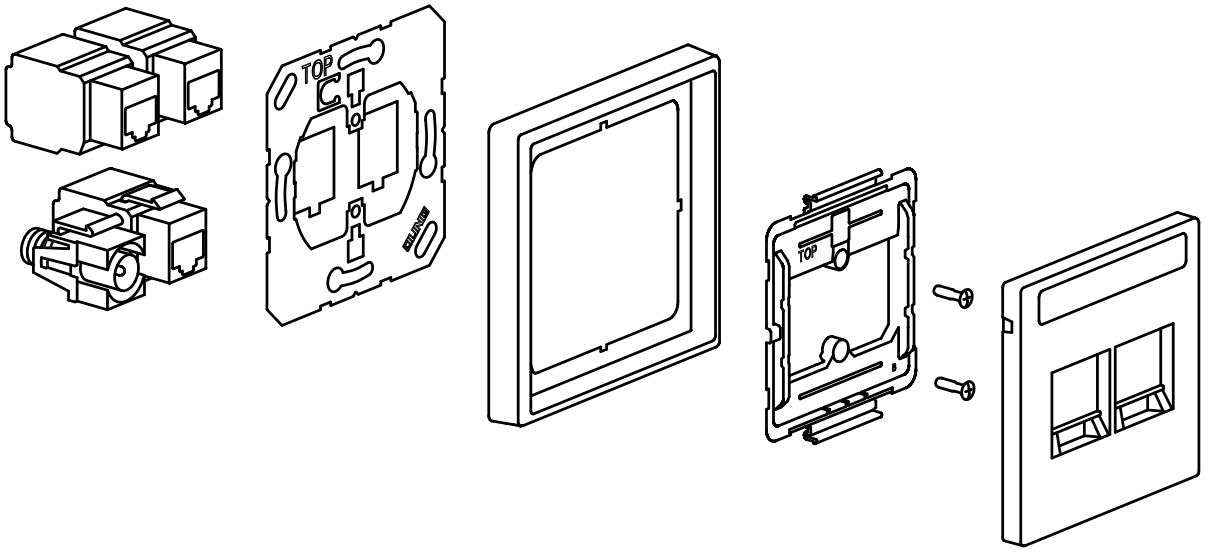


ALBRECHT JUNG GMBH & CO. KG | Volmestraße 1 | 58579 Schalksmühle | GERMANY 06/2022

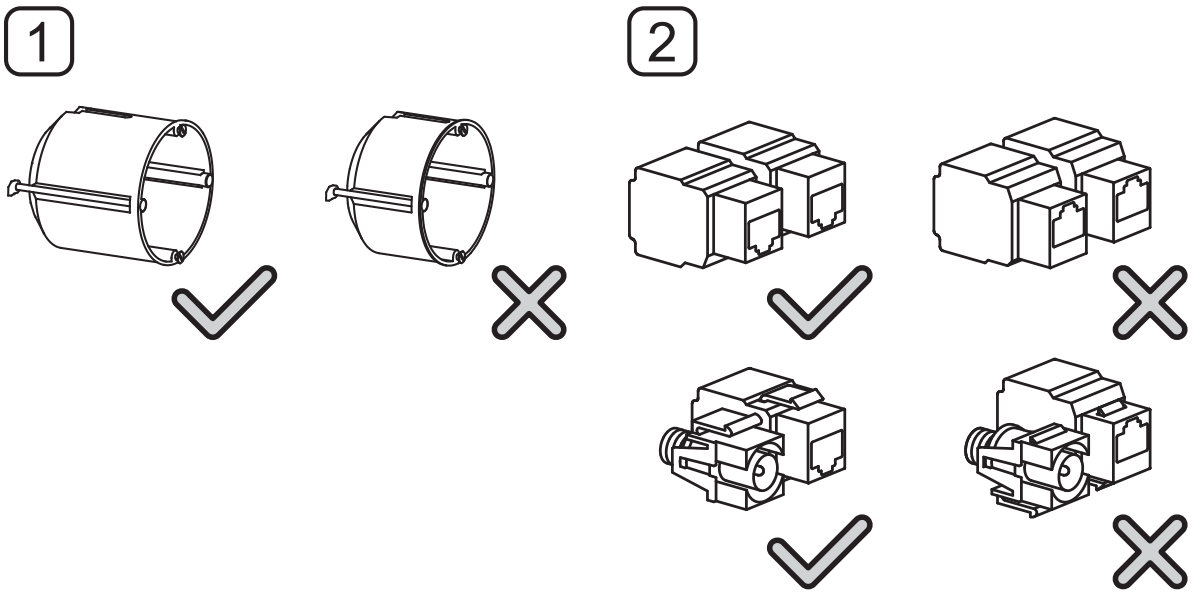


ALBRECHT JUNG GMBH & CO. KG | Volmestraße 1 | 58579 Schalksmühle | GERMANY 06/2022

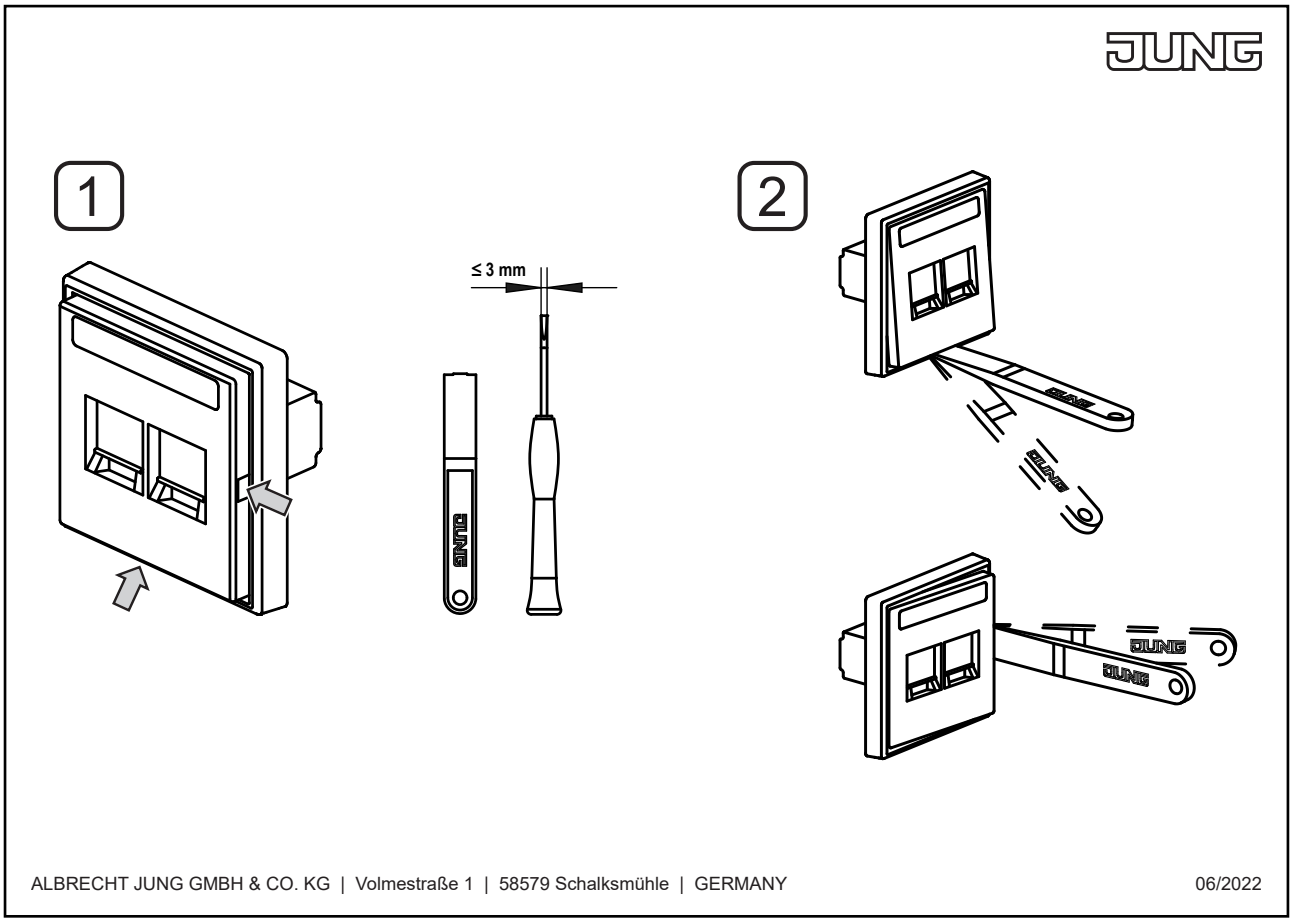


ALBRECHT JUNG GMBH & CO. KG | Volmestraße 1 | 58579 Schalksmühle | GERMANY 06/2022