Centre plate for thermostat, thermoplastic lacquered, A range, matt anthracite



Reference number:	A 1749 BF ANM
EAN/GTIN:	4011377195110
Color:	matt anthracite
Material:	thermoplastic

matt lacquered
for room thermostats ref.-no.: RTR 230, RTR 231, RTR 233, RTR 241
for floor thermostat ref.-no.: FTR 231

Plastic design cover made from 95% recycled material in accordance with DIN EN ISO 14021 - sustainable, conserves resources

Dimensions

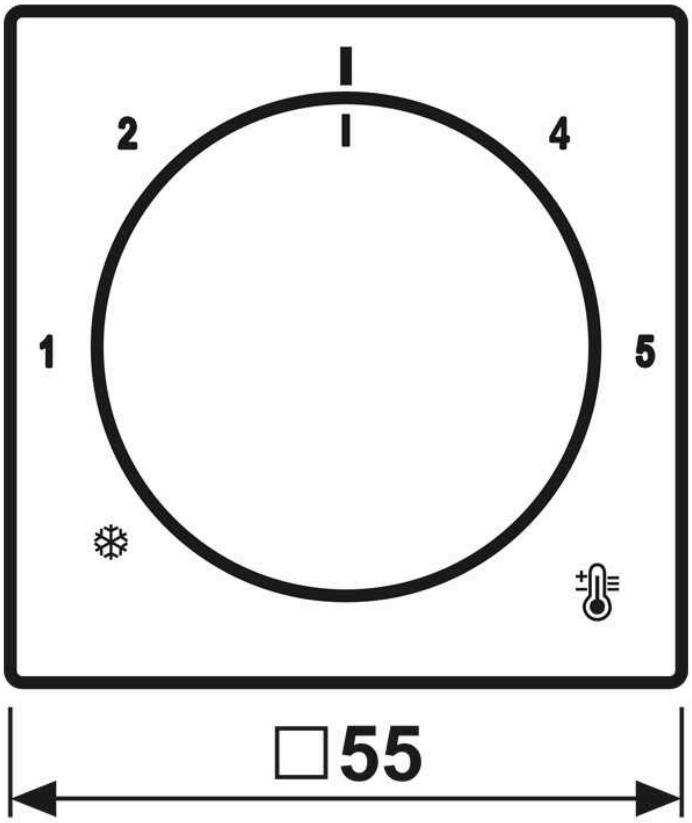

ALBRECHT JUNG GMBH & CO. KG
Volmestraße 1
58579 Schalksmühle

Phone +49 (0) 23 55/80 60
E-Mail kundencenter@jung.de

Assembly

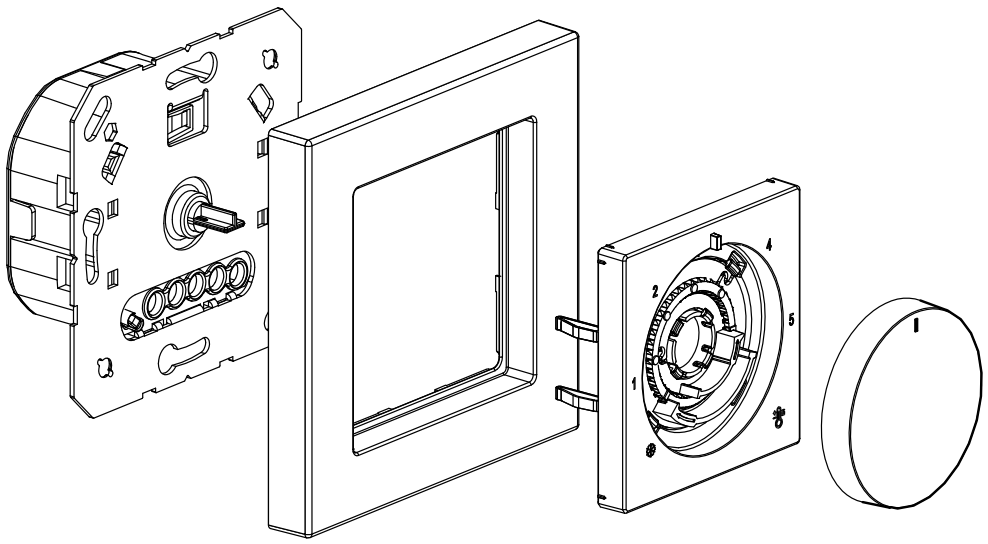

ALBRECHT JUNG GMBH & CO. KG | Volmestraße 1 | 58579 Schalksmühle | GERMANY 02/2023