# Rocker 1-gang, thermoplastic lacquered, A range, matt anthracite



| | |
|---|---|
| **Reference number:** | A 590 BF ANM |
| **EAN/GTIN:** | 4011377127883 |
| **Color:** | matt anthracite |
| **Material:** | thermoplastic |

Degree of protection IP44 is ensured with sealing gasket ref.-no. 551 WU and "IP44 frame" of the respective design range.

Individual colour printing possible

**matt lacquered**
for switch ref.-no.: 501 U, 502 U, 503 U, 506 U, 507 U, 501-20 U, 506-20 U, 507-20 U
for push-button ref.-no.: 531 U, 532 U, 533 U, 533-2 U

**Spare part:**
**Spare part:**
holder plate ref.-no.: AS 90 HP

For illuminated inserts use rocker with lens ref.-no.: ..KO...

Plastic design cover made from 95% recycled material in accordance with DIN EN ISO 14021 - sustainable, conserves resources

## Dimensions

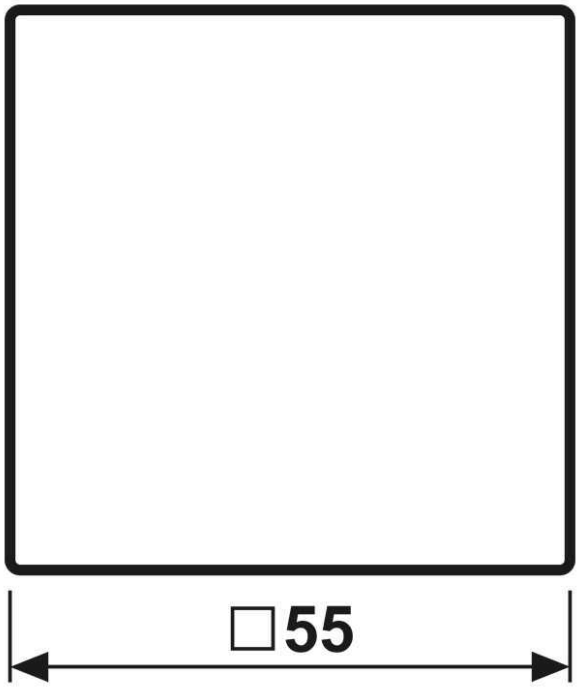


**ALBRECHT JUNG GMBH & CO. KG**
Volmestraße 1
58579 Schalksmühle

Phone +49 (0) 23 55/80 60
E-Mail kundencenter@jung.de

## Assembly

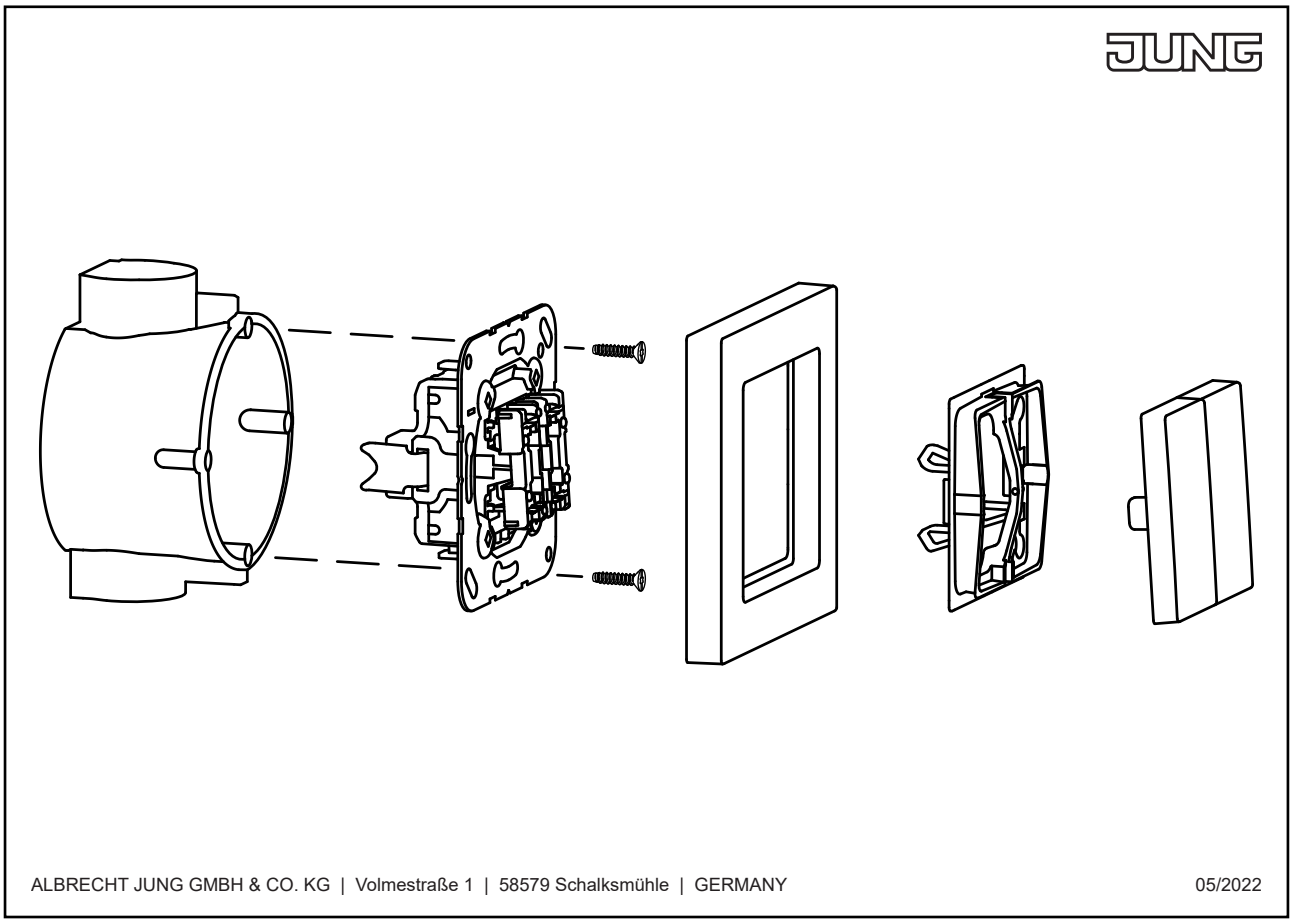
ALBRECHT JUNG GMBH & CO. KG | Volmestraße 1 | 58579 Schalksmühle | GERMANY
05/2022