Blank centre plate (snap-on fixing), thermoplastic lacquered, A range, aluminium

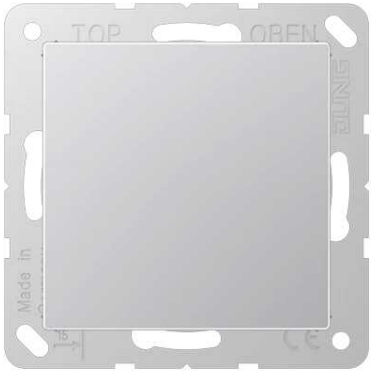

Reference number:	A 594-0 AL
EAN/GTIN:	4011377132559
Color:	aluminium
Material:	thermoplastic

Degree of protection IP44 is ensured with sealing gasket ref.-no. 551 WU and "IP44 frame" of the respective design range.

Individual colour printing possible

Individual laser engraving possible

Thermoplastic (breakproof) lacquered
(with supporting frame, screw fixing only)

The cover will be installed with snap-on fixing and enables individual cuttings or drilling holes.

Dimensions

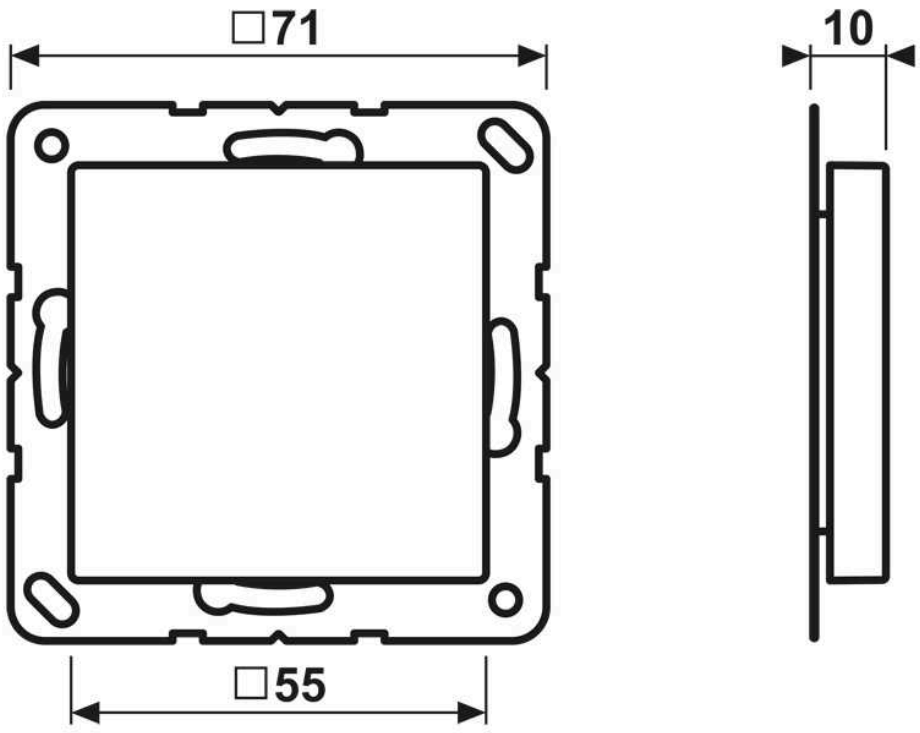

ALBRECHT JUNG GMBH & CO. KG
Volmestraße 1
58579 Schalksmühle

Phone +49 (0) 23 55/80 60
E-Mail kundencenter@jung.de