# Surface cap 3-gang, A CUBE, thermoplastic, black, vertical and horizontal installation



| | |
|---|---|
| **Reference number:** | A 5583 BF A SW |
| **EAN/GTIN:** | 4011377212121 |
| **Version:** | 3-gang |
| **Color:** | black |
| **Material:** | thermoplastic |

Individual colour printing possible
Individual laser engraving possible

**Thermoplastic (breakproof) high-gloss**
with integrated frame and non-flammable ground plate

for inserts with covers of the A range (except key switches ref.-no. ..15, 3-level-switch and socket for Switzerland type 13)
227 x 85 x 47 mm
Installation depth max. 34 mm

**Spare part:**
Mounting box ref.-no.: 583 A
Strain relief ref.-no.: 58 A ZUG

## Dimensions

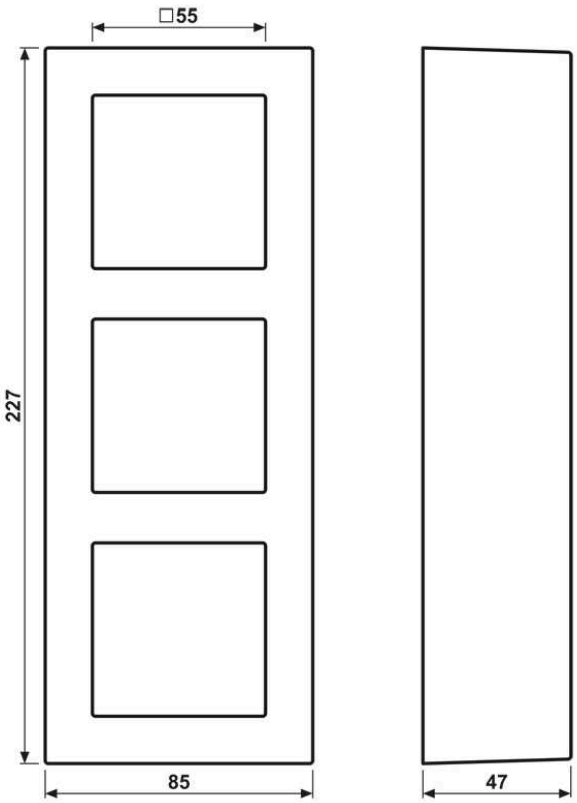


**ALBRECHT JUNG GMBH & CO. KG**
Volmestraße 1
58579 Schalksmühle

Phone +49 (0) 23 55/80 60
E-Mail kundencenter@jung.de

## Assembly

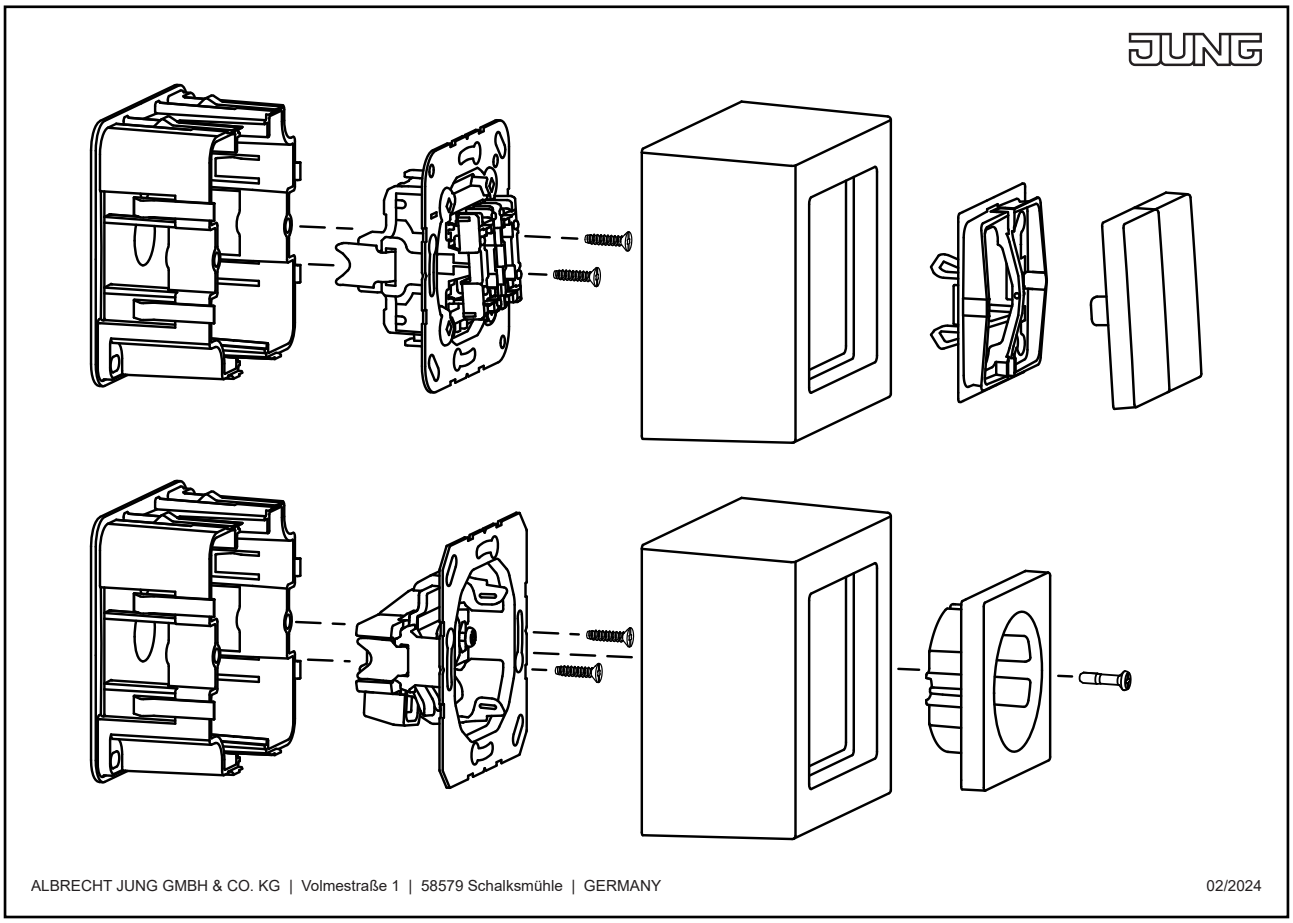
ALBRECHT JUNG GMBH & CO. KG | Volmestraße 1 | 58579 Schalksmühle | GERMANY
02/2024