Surface cap 2-gang, A CUBE, thermoplastic, black, vertical and horizontal installation



Reference number:	A 5582 BF A SW
EAN/GTIN:	4011377212060
Version:	2-gang
Color:	black
Material:	thermoplastic

Individual colour printing possible
Individual laser engraving possible

Thermoplastic (breakproof) high-gloss
with integrated frame and non-flammable ground plate
for inserts with covers of the A range (except key switches ref.-no. ..15, 3-level-switch and socket for Switzerland type 13)
156 x 85 x 47 mm
Installation depth max. 34 mm

Spare part:
Mounting box ref.-no.: 582 A
Strain relief ref.-no.: 58 A ZUG

Dimensions

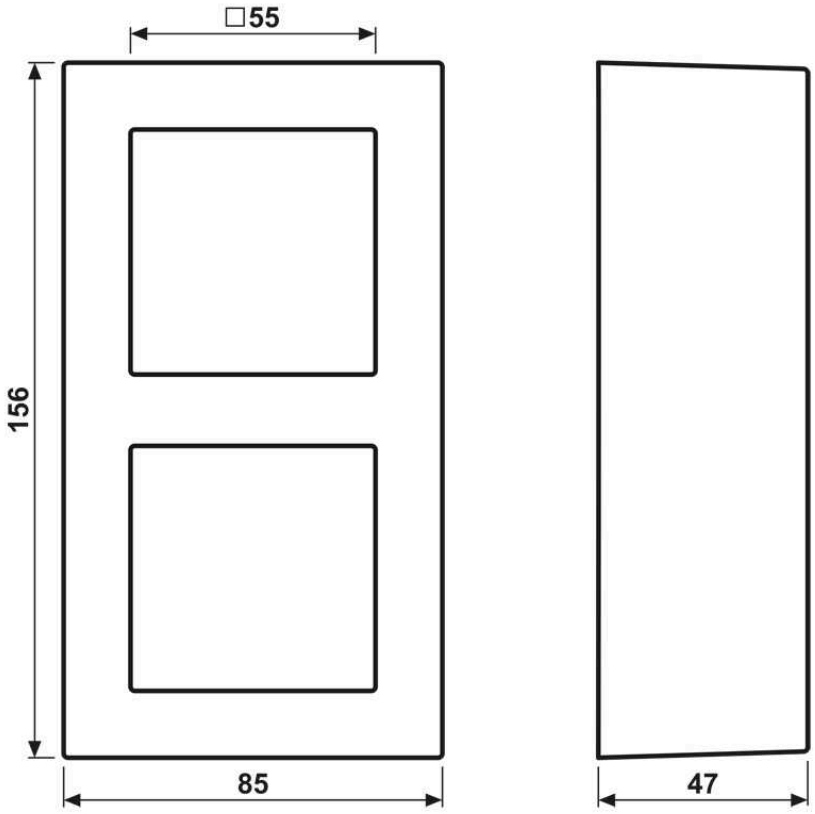

ALBRECHT JUNG GMBH & CO. KG
Volmestraße 1
58579 Schalksmühle
Phone +49 (0) 23 55/80 60
E-Mail kundencenter@jung.de

Assembly

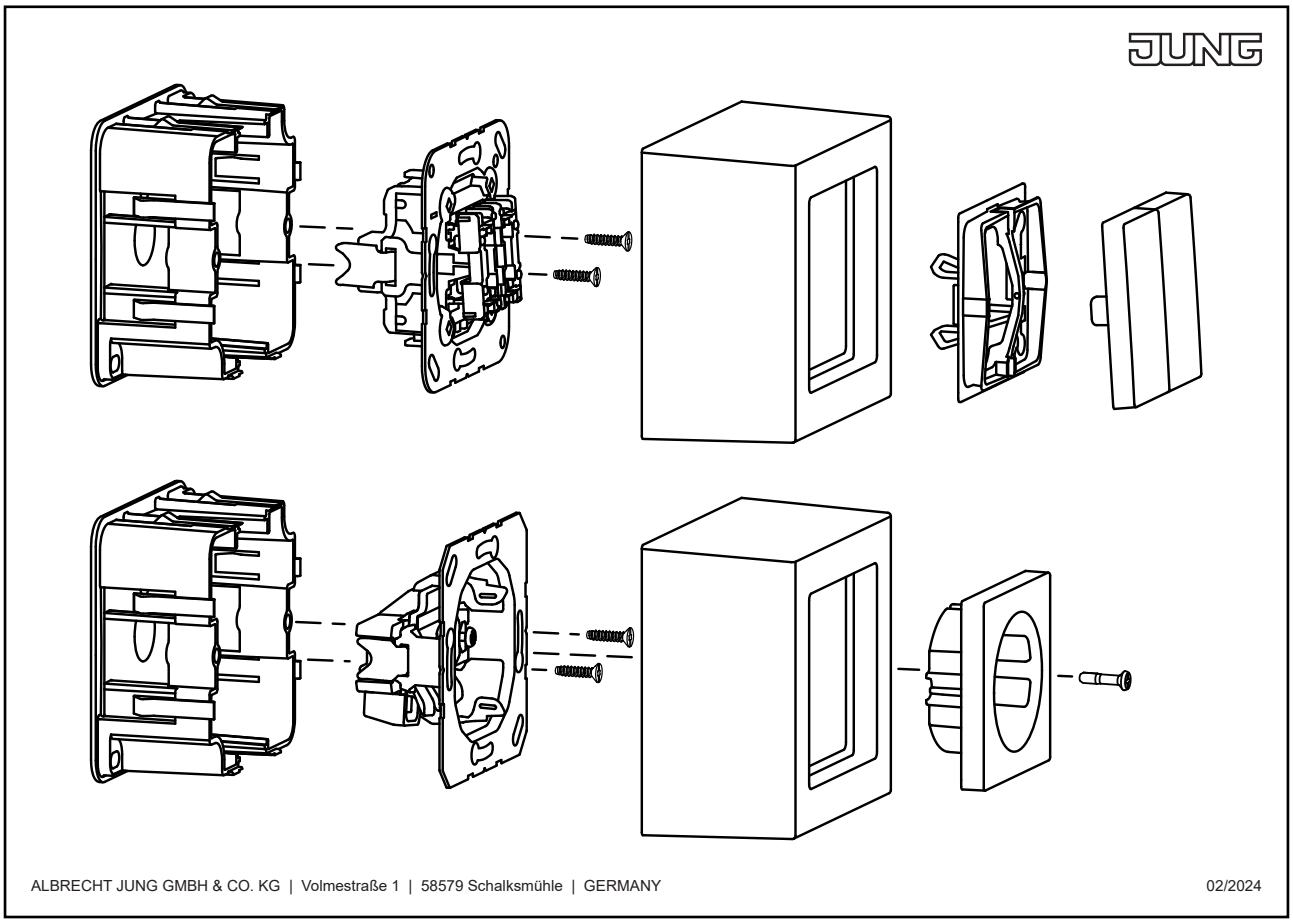
ALBRECHT JUNG GMBH & CO. KG | Volmestraße 1 | 58579 Schalksmühle | GERMANY
02/2024