Centre plate (snap-on fixing) for modular jack sockets, 2-gang, UMA-CAT6A, RADIALL, Panduit, Assmann, thermoplastic, A range, black

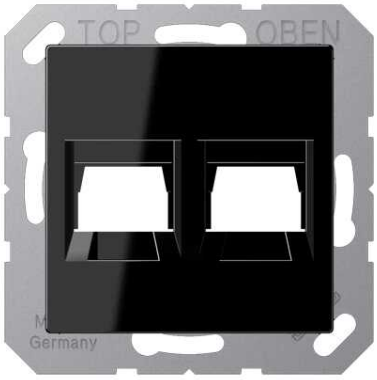

Reference number:	A 1569-2 WE SW
EAN/GTIN:	4011377177451
Color:	black
Material:	thermoplastic

Individual colour printing possible
Individual laser engraving possible

Thermoplastic (breakproof) high-gloss
(with supporting frame, screw fixing only)
shutter with spring
inner dimensions of keystone mount 15,3 x 19,3 mm
for universal modular jack socket ref.-no.: UMA-CAT6A-25
for 2 sockets

for modular jack sockets
RADIALL:
modular jack unshielded 6P6C, RJ 12, Cat. 4 (ref.-no. R280MOD804)
modular jack unshielded 8P8C, RJ 45, Cat. 4 (ref.-no. R280MOD805)
modular jack unshielded 8P8C, RJ 45, Cat. 5e (ref.-no. R280MOD807)
Panduit:
keystone jack KJ 88..
keystone jack KJ 588..
Assmann:
module DN-93612 Cat. 6A, shielded, Keystone
module DN-93614
SCHRACK
HSPMRJ6G1A, HSEMRJ6GBA, HSEMRJ6GBS, HSEMRJ6GWA, HSEMRJ6GWS, HSEMRJ6UWS

Dimensions

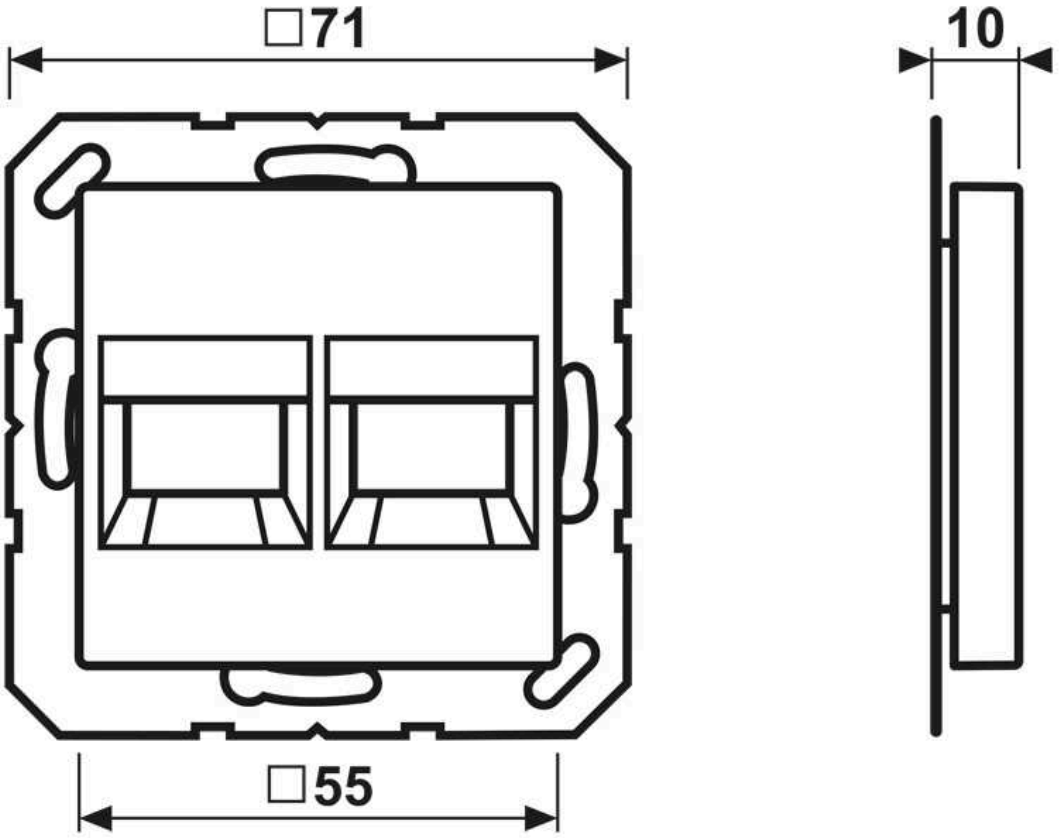

ALBRECHT JUNG GMBH & CO. KG
Volmestraße 1
58579 Schalksmühle

Phone +49 (0) 23 55/80 60
E-Mail kundencenter@jung.de

Assembly

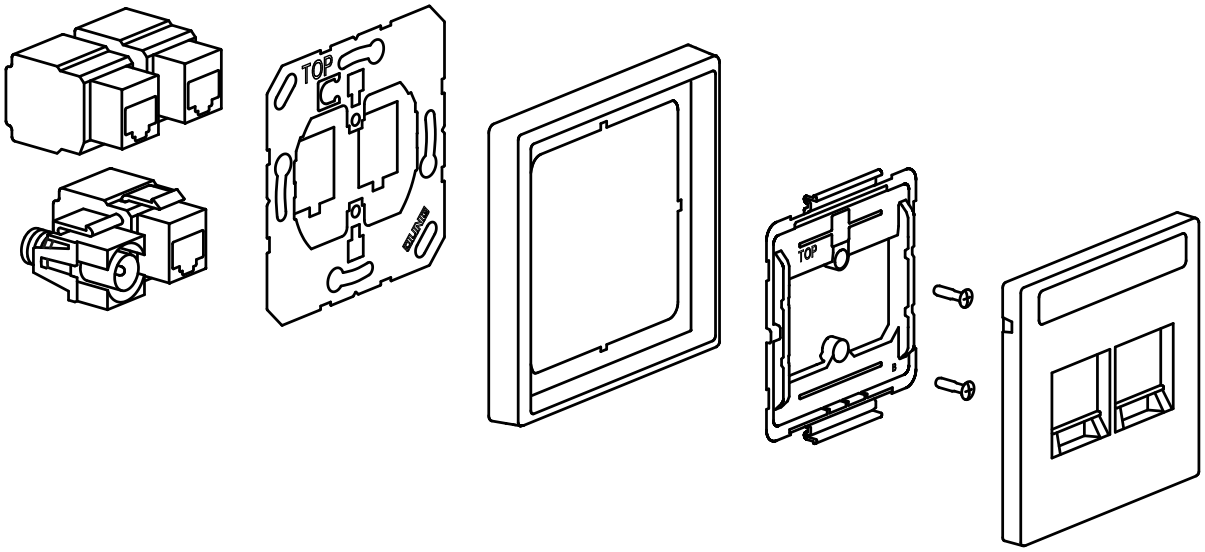

ALBRECHT JUNG GMBH & CO. KG | Volmestraße 1 | 58579 Schalksmühle | GERMANY 06/2022

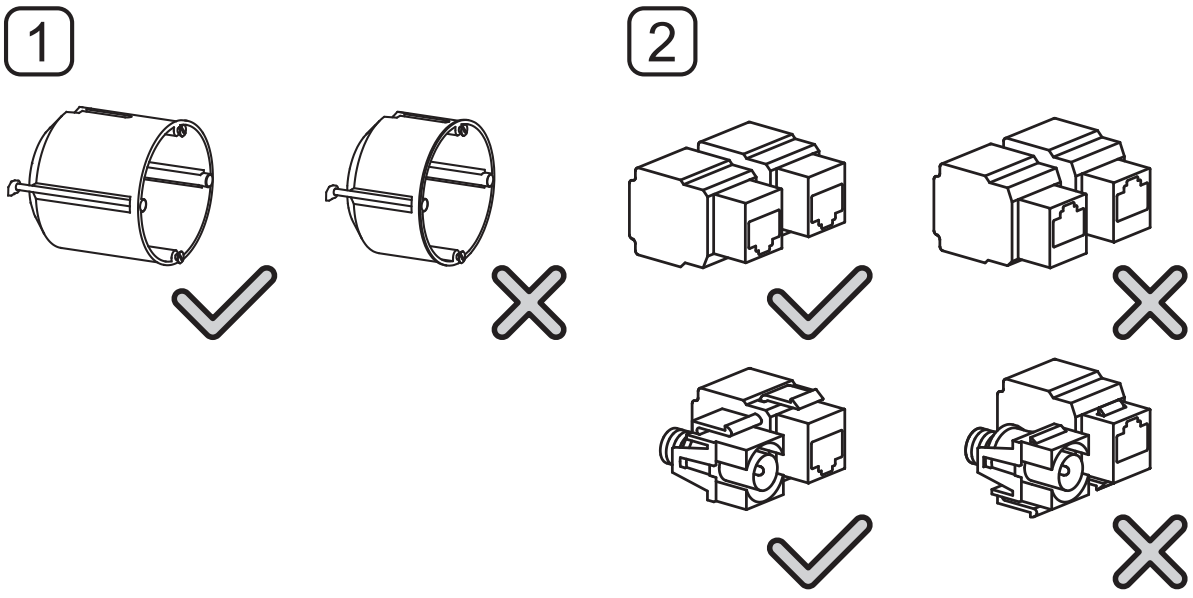

ALBRECHT JUNG GMBH & CO. KG | Volmestraße 1 | 58579 Schalksmühle | GERMANY 06/2022

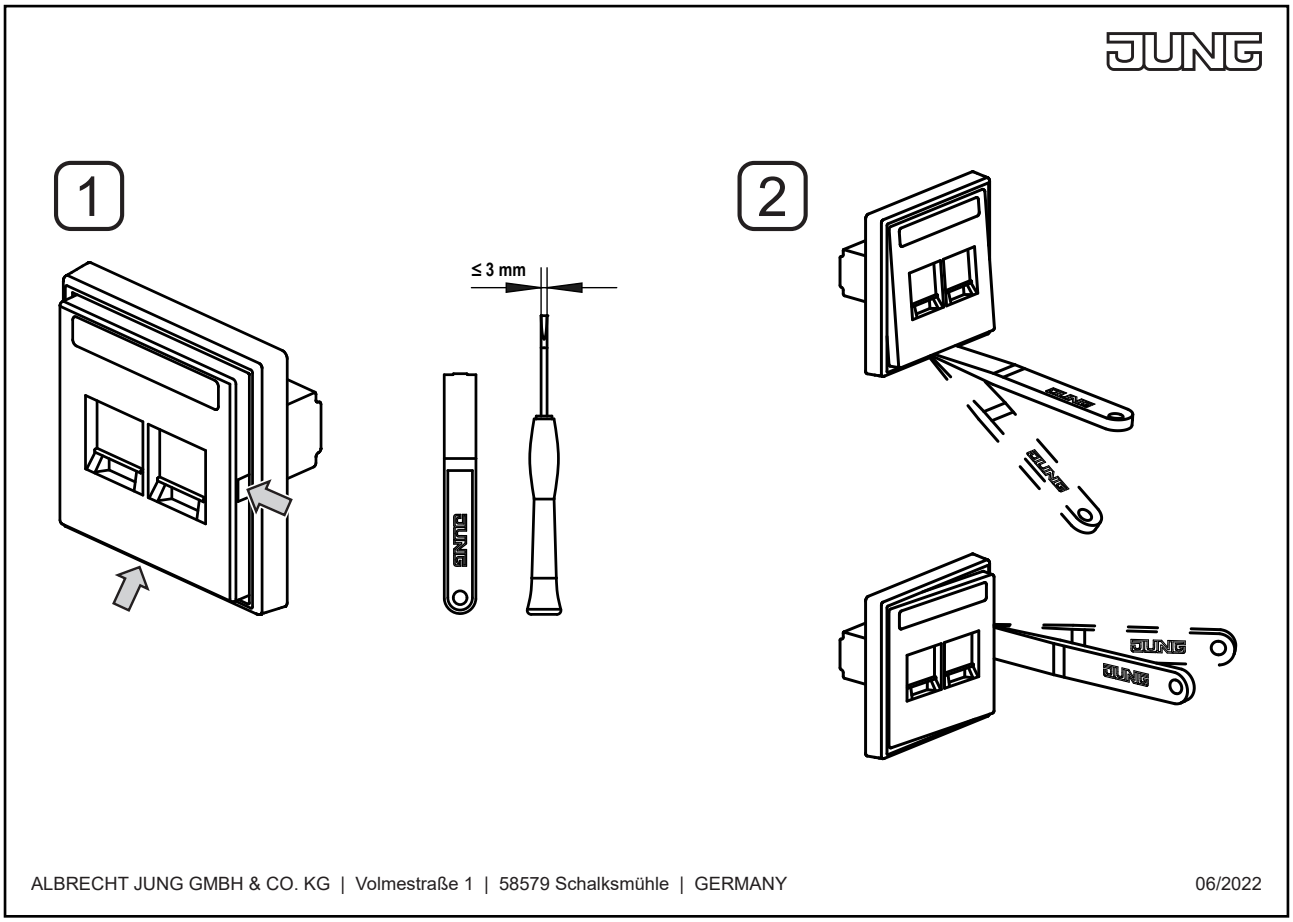

ALBRECHT JUNG GMBH & CO. KG | Volmestraße 1 | 58579 Schalksmühle | GERMANY 06/2022