# LB Management room thermostat set, AS/A range, black




| | |
|---|---|
| **Reference number:** | TR D A 1790 SW |
| **EAN/GTIN:** | 4011377172197 |
| **Color:** | black |
| **Material:** | glass |

consists of room thermostat insert (ref.-no.: 1790 RTR) and display (ref.-no.: .. 1790 D ..)

## Technical data

| | |
|---|---|
| **Rated voltage:** | AC 230 V ~ |
| **Mains frequency:** | 50/60 Hz |
| **Stand-by power depending on the cover:** | approx. 0.1 ... 0.5 W |
| **Switching current 230 V AC1:** | 10 mA ... 16 A |
| **Connected load:** | max. 3,600 W |
| **Connection** | |
| single wire: | 1 x 0.5 ... 4.0 mm² 2 x 0.5 ... 2.5 mm² |
| stranded without ferrule: | 1 x 0.5 ... 4.0 mm²2 x 0.5 ... 2.5 mm² |
| stranded with ferrule: | 1 x 0.5 ... 4.0 mm²2 x 0.5 ... 1.5 mm² |
| **Ambient temperature:** | -5 ... +45 °C |
| **Accuracy per month:** | ± 10 s |
| **Power reserve:** | > 4 h |
| **Regulator class (EU 811/2013):** | IV |
| **Contribution to energy efficiency:** | 2 % |

**ALBRECHT JUNG GMBH & CO. KG**
Volmestraße 1
58579 Schalksmühle

Phone +49 (0) 23 55/80 60
E-Mail kundencenter@jung.de

## Dimensions

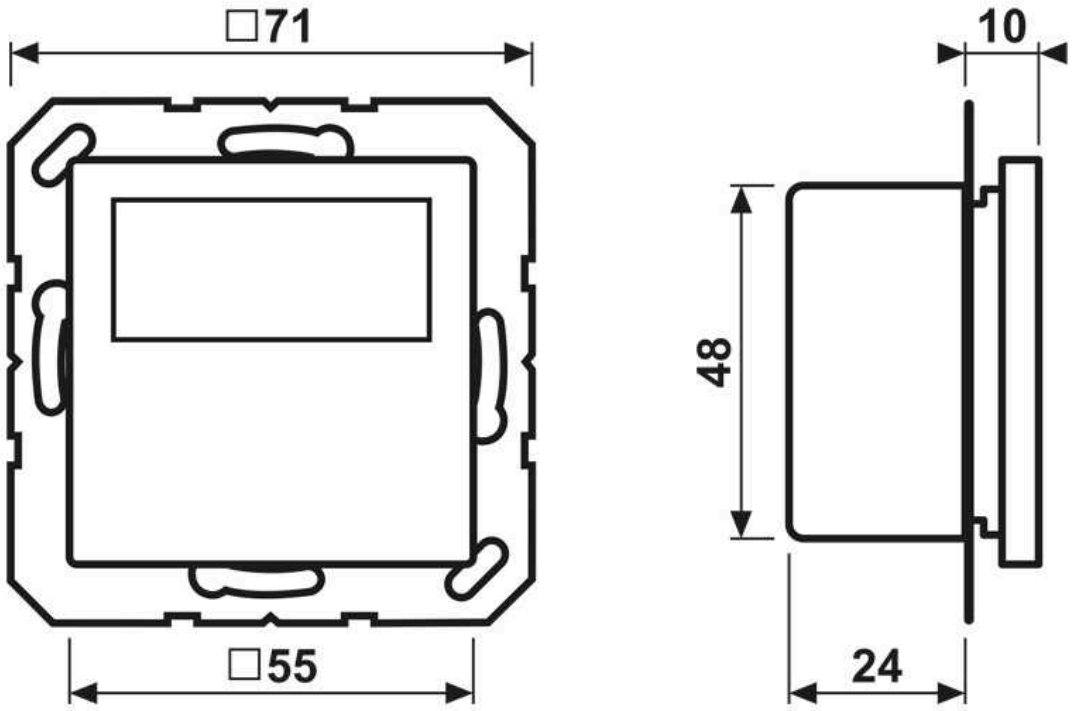


**ALBRECHT JUNG GMBH & CO. KG**
Volmestraße 1
58579 Schalksmühle

Phone +49 (0) 23 55/80 60
E-Mail kundencenter@jung.de

## Assembly

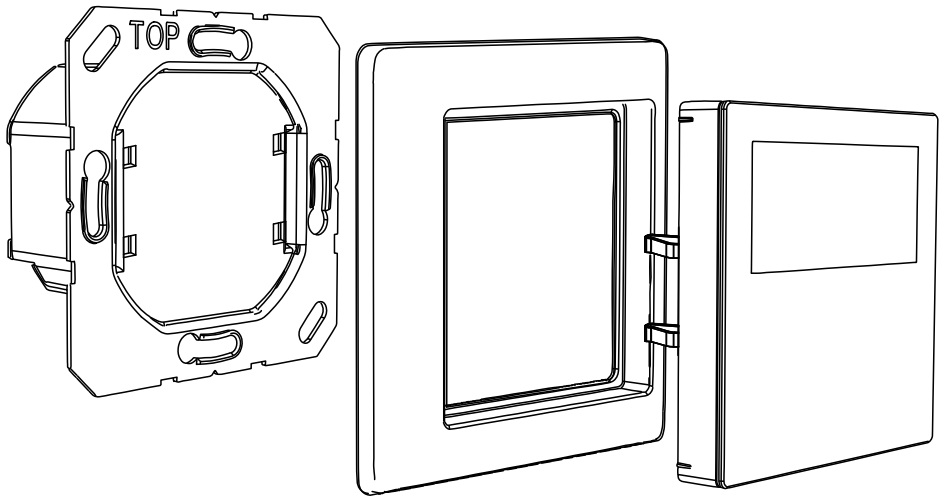


ALBRECHT JUNG GMBH & CO. KG | Volmestraße 1 | 58579 Schalksmühle | GERMANY 02/2023