SCHUKO® socket, 16 A 250 V ~, with USB charger, 1 x type C, Safety Plus, A range, black



Reference number:	A 1520-18 C SW
EAN/GTIN:	4011377184268
Color:	black
Material:	thermoplastic

Individual colour printing possible
Individual laser engraving possible

Thermoplastic (breakproof) high-gloss
with enhanced contact protection / shutter (Safety Plus)
with 1 USB port type C
with quick charge function (JUNG Quick Charge®)
with screwless terminals for rigid and untreated flexible wires up to 2.5 mm^2

Installation in flush box with dimensions according to DIN 49073
depth of flush box (inner dimension): min. 57 mm

Accessories:
Accessories:
Frame 28 mm structure height ref.-no.: A 558.. HBF ..

Accessories:
Black screws ref.-no.: S-NFB SCHUKO SW

Technical data

Rated voltage:	AC 220 ... 250 V ~
Mains frequency:	50/60 Hz
Rated current:	16 A
Output voltage USB:	DC 9 V / DC 5 V
Output current USB:	2 A / 3 A
Stand-by power:	≤ 25 mW
Ambient temperature:	+5 ... +35 °C
Storage/transport temperature:	-20 ... +70 °C
Connection mode:	screwless terminals

ALBRECHT JUNG GMBH & CO. KG
Volmestraße 1
58579 Schalksmühle
Phone +49 (0) 23 55/80 60
E-Mail kundencenter@jung.de

Dimensions

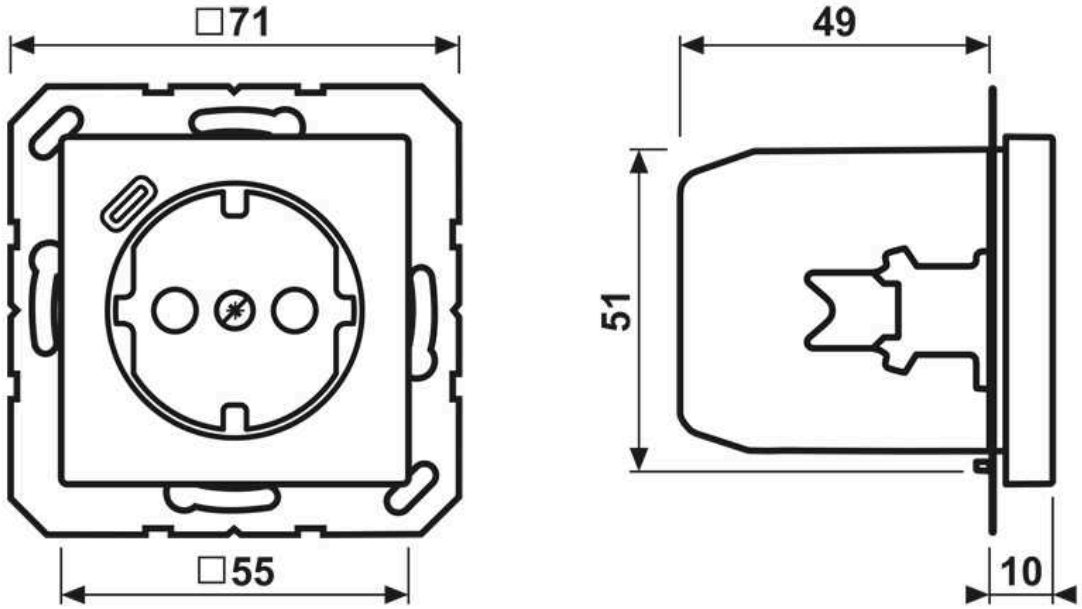

ALBRECHT JUNG GMBH & CO. KG
Volmestraße 1
58579 Schalksmühle

Phone +49 (0) 23 55/80 60
E-Mail kundencenter@jung.de

Assembly

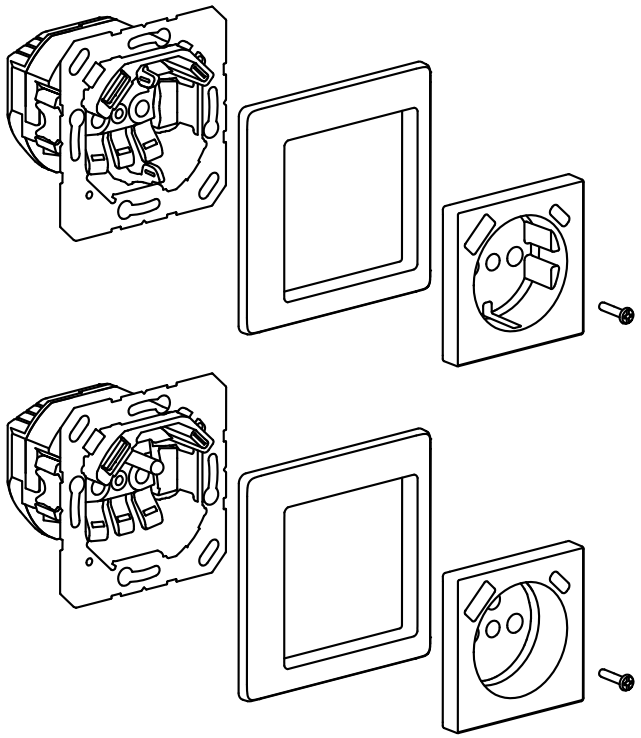

ALBRECHT JUNG GMBH & CO. KG | Volmestraße 1 | 58579 Schalksmühle | GERMANY 09/2022