Rocker 2-gang, thermoplastic, A range, black



Reference number:	A 595 BF SW
EAN/GTIN:	4011377103382
Color:	black
Material:	thermoplastic

Degree of protection IP44 is ensured with sealing gasket ref.-no. 551 WU and "IP44 frame" of the respective design range.

Individual colour printing possible

Individual laser engraving possible

Thermoplastic (breakproof) high-gloss
for switch ref.-no.: 505 U, 509 U, 505-20 U, 509-20 U
for push-button ref.-no.: 535 U, 539 U

Spare part:
Spare part:
holder plate ref.-no.: AS 90-5 HP

For illuminated inserts use rocker with lens ref.-no.: ..KO...

Dimensions

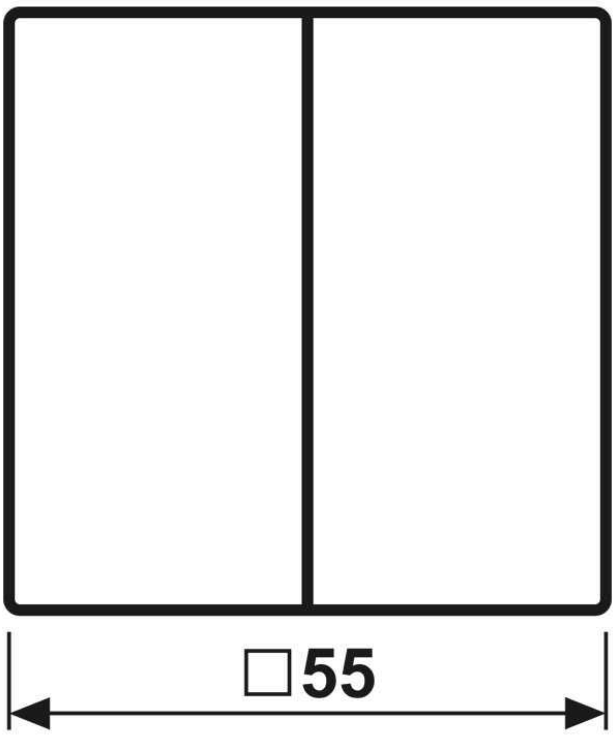

ALBRECHT JUNG GMBH & CO. KG
Volmestraße 1
58579 Schalksmühle

Phone +49 (0) 23 55/80 60
E-Mail kundencenter@jung.de

Assembly

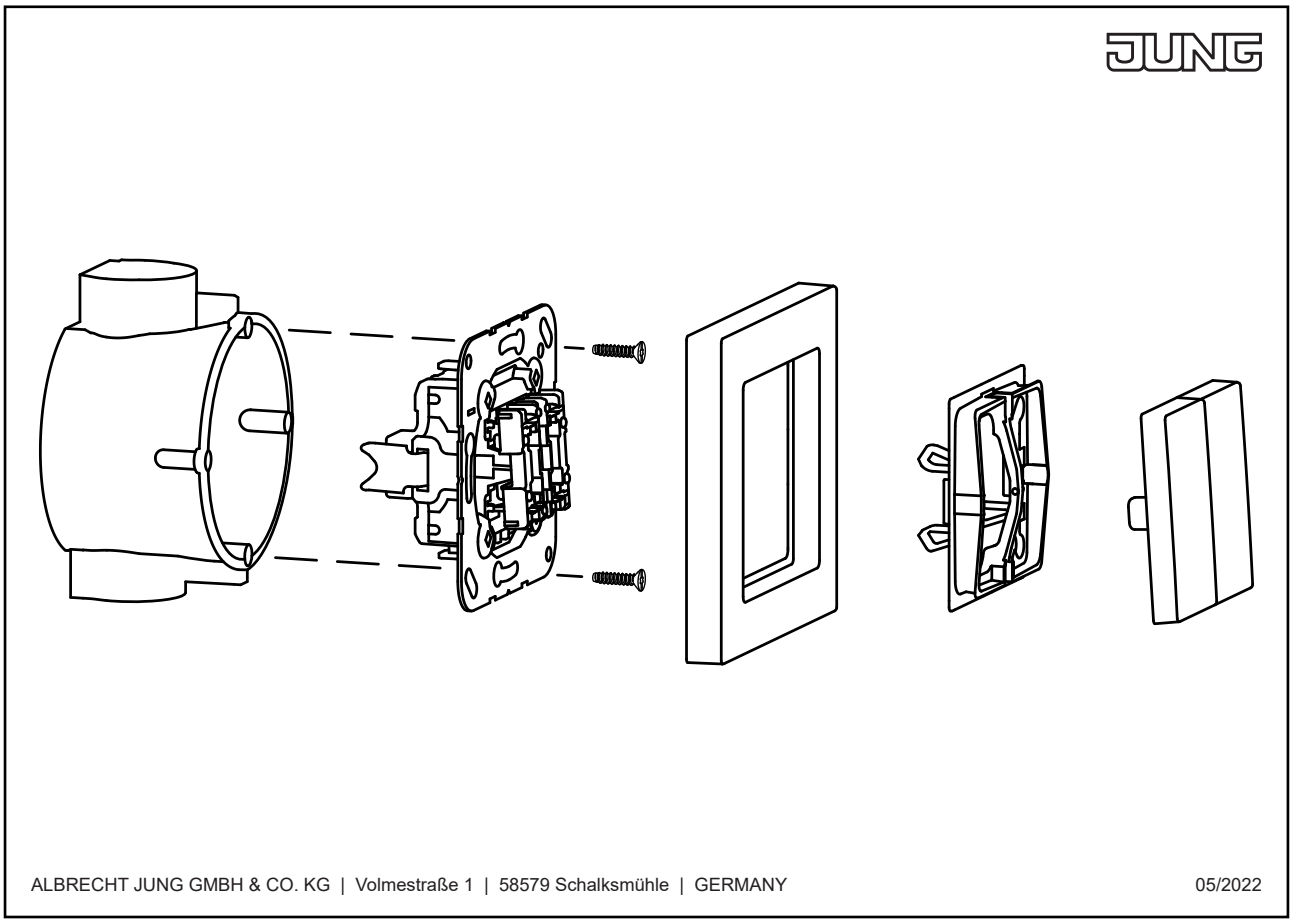
ALBRECHT JUNG GMBH & CO. KG | Volmestraße 1 | 58579 Schalksmühle | GERMANY
05/2022