LED floor pilot light without brightness sensor, thermoplastic, AS/A range, white

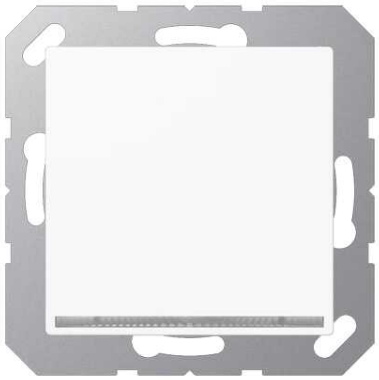

Reference number:	A 1539-OO WW LNW
EAN/GTIN:	4011377154711
Color:	white
Material:	thermoplastic

Individual colour printing possible

Thermoplastic (breakproof) high-gloss
with screwless terminals for rigid wires up to 2.5 mm^2

installation into deep flush box
with white LEDs (colour temperature 3500 K)
Power consumption (ON): 0.5 W
The LED floor pilot light can be switched via an external switch.
Supporting frame, claws and claw screws are integrated into the earth protection.

Dimensions

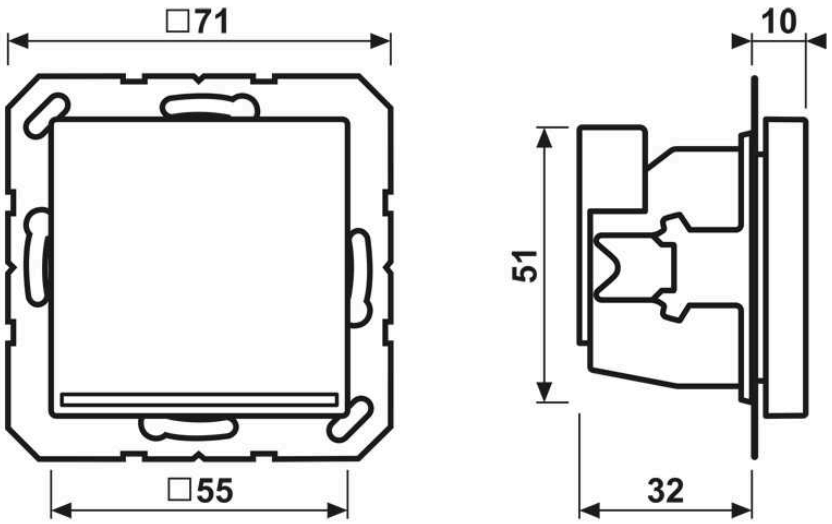

ALBRECHT JUNG GMBH & CO. KG
Volmestraße 1
58579 Schalksmühle

Phone +49 (0) 23 55/80 60
E-Mail kundencenter@jung.de