Centre plate for commanding appliance with Ø 22.5 mm 1-gang, duroplastic, AS/A range, white



Reference number:	A 564 WW
EAN/GTIN:	4011377041653
Color:	white
Material:	duroplastic

Individual colour printing possible

Duroplastic (scratch-proof) glossy
(with supporting frame, screw fixing only)
for commanding appliance with Ø 22.5 mm
e.g. Moeller, Rafi, Schlegel, Lumitas, Kraus-Naimer

with adhesive labels "NOTSCHALTER", "HEIZUNG", "RAUCHABZUG", ÖFFNEN", "LICHTKUPPEL", "HAUSALARM", "bei Feuer Glas einschlagen – Knopf drücken"

Spare adhesive labels ref.-no. 60 FO

Dimensions

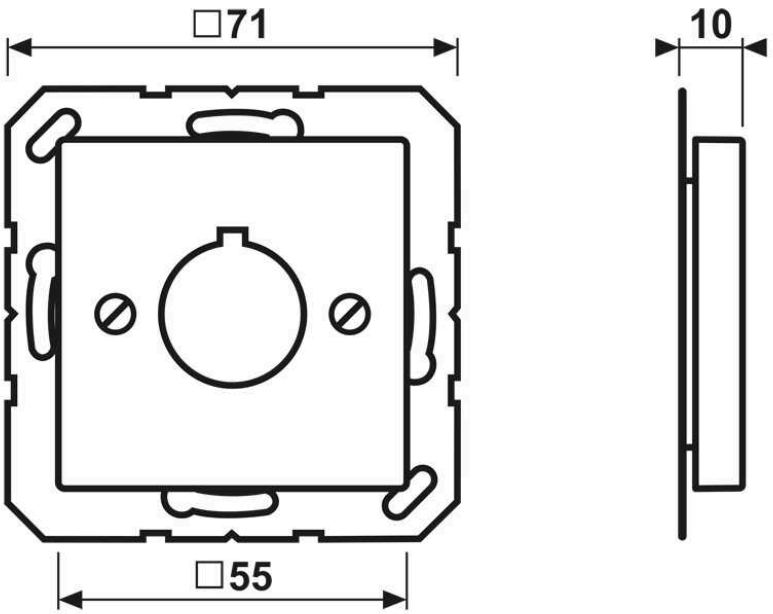

ALBRECHT JUNG GMBH & CO. KG
Volmestraße 1
58579 Schalksmühle

Phone +49 (0) 23 55/80 60
E-Mail kundencenter@jung.de