LB Management room thermostat set, AS/A range, white



Reference number:	TR D A 1790 WW
EAN/GTIN:	4011377172180
Color:	white
Material:	glass

consists of room thermostat insert (ref.-no.: 1790 RTR) and display (ref.-no.: .. 1790 D ..)

Technical data

Rated voltage:	AC 230 V ~
Mains frequency:	50/60 Hz
Stand-by power depending on the cover:	approx. 0.1 ... 0.5 W
Switching current 230 V AC1:	10 mA ... 16 A
Connected load:	max. 3,600 W
Connection	
single wire:	1 x 0.5 ... 4.0 mm² 2 x 0.5 ... 2.5 mm²
stranded without ferrule:	1 x 0.5 ... 4.0 mm²2 x 0.5 ... 2.5 mm²
stranded with ferrule:	1 x 0.5 ... 4.0 mm²2 x 0.5 ... 1.5 mm²
Ambient temperature:	-5 ... +45 °C
Accuracy per month:	± 10 s
Power reserve:	> 4 h
Regulator class (EU 811/2013):	IV
Contribution to energy efficiency:	2 %

Dimensions

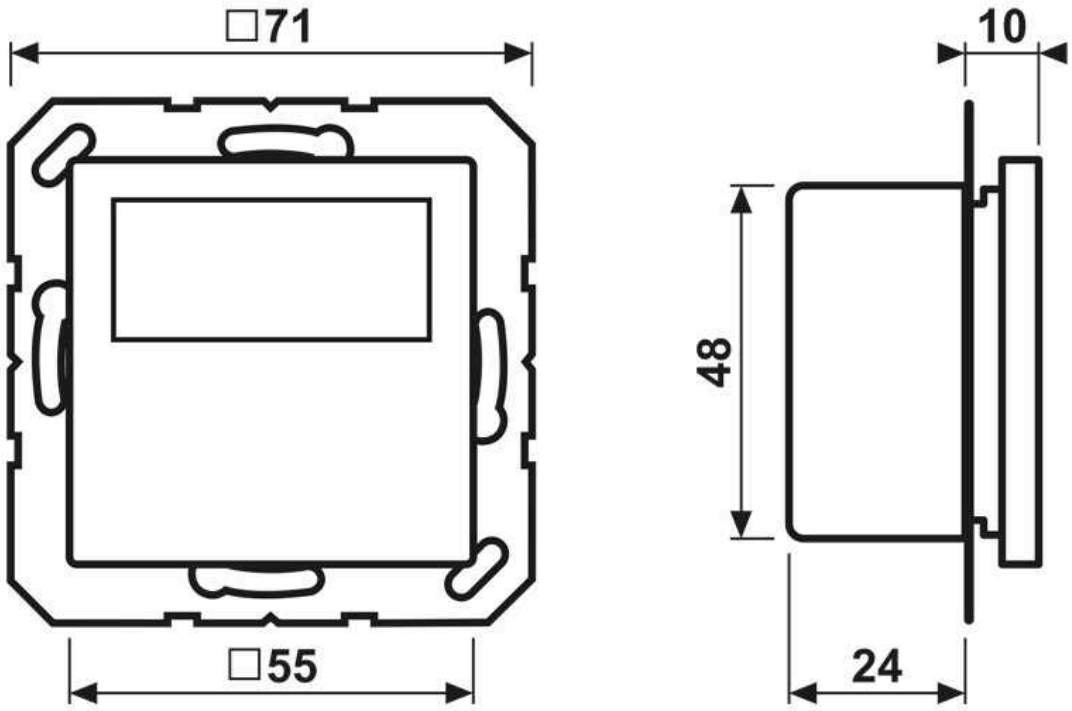

ALBRECHT JUNG GMBH & CO. KG
Volmestraße 1
58579 Schalksmühle

Phone +49 (0) 23 55/80 60
E-Mail kundencenter@jung.de

Assembly

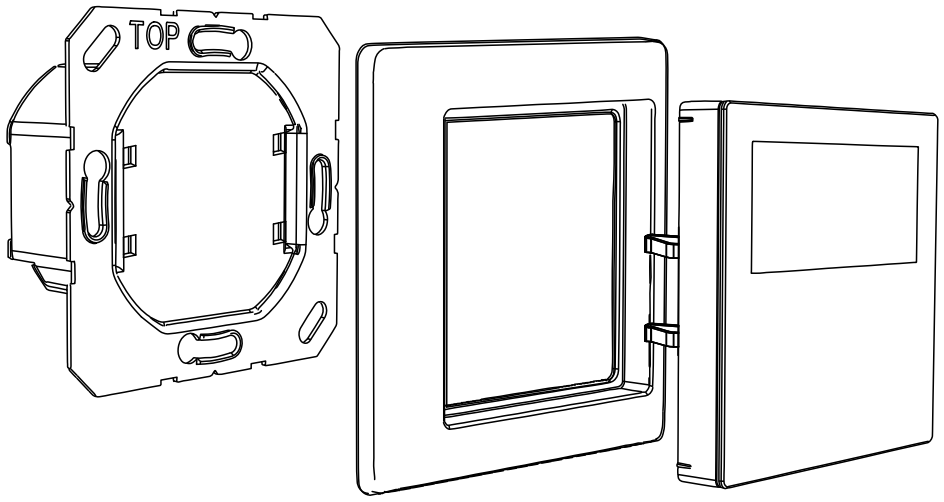

ALBRECHT JUNG GMBH & CO. KG | Volmestraße 1 | 58579 Schalksmühle | GERMANY 02/2023