Centre plate for thermostat, thermoplastic, AS/A range, white

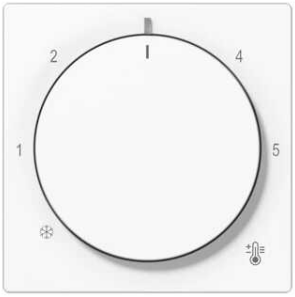

Reference number:	A 1749 BF WW
EAN/GTIN:	4011377195141
Color:	white
Material:	thermoplastic

Thermoplastic (breakproof) high-gloss
for room thermostats ref.-no.: RTR 230, RTR 231, RTR 233, RTR 241
for floor thermostat ref.-no.: FTR 231

Dimensions

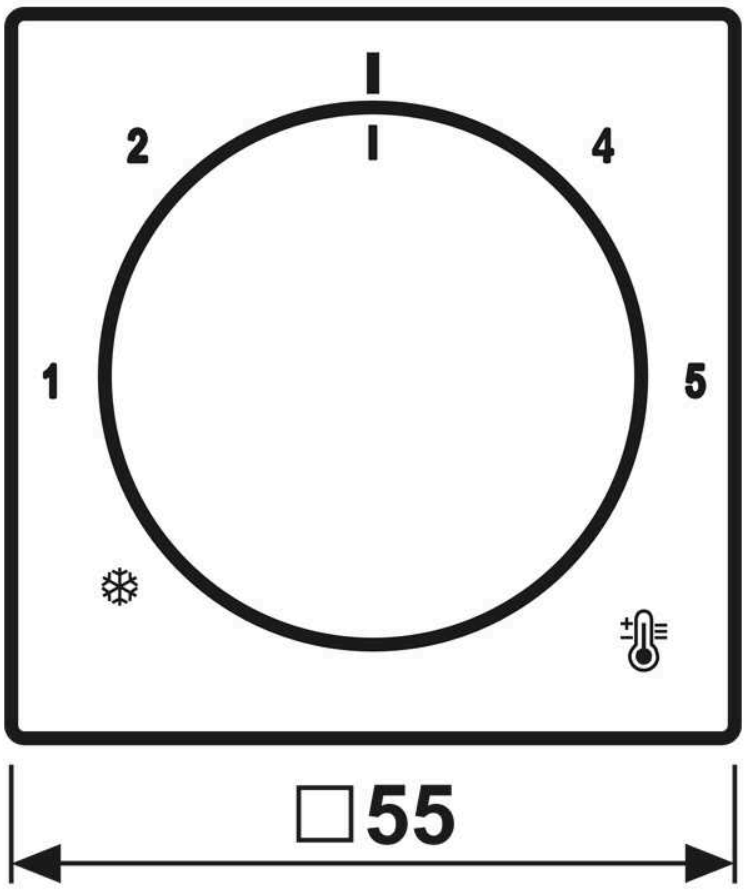

ALBRECHT JUNG GMBH & CO. KG
Volmestraße 1
58579 Schalksmühle

Phone +49 (0) 23 55/80 60
E-Mail kundencenter@jung.de

Assembly

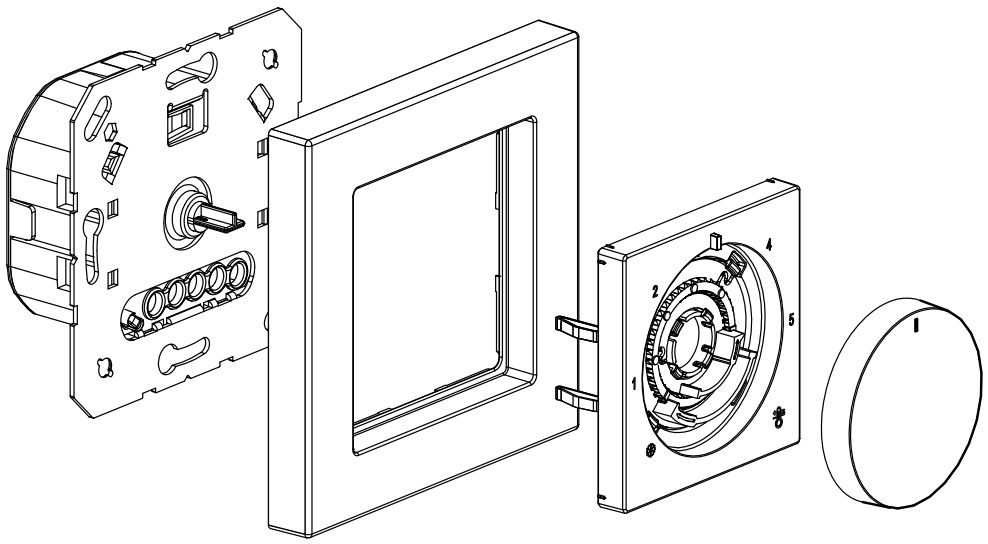

ALBRECHT JUNG GMBH & CO. KG | Volmestraße 1 | 58579 Schalksmühle | GERMANY 02/2023