Sealing gasket



Reference number:	551 WU
EAN/GTIN:	4011377672208
Material:	thermoplastic

IP44

to ensure degree of protection IP44
for all flush-mounted switch/push-button inserts of the 500 range, SCHUKO® sockets with hinged lid, rotary switches and timer switch inserts
for all devices, covers and frames with blue "IP44 marking"
in some cases with additional gaskets acc. to product description

Assembly

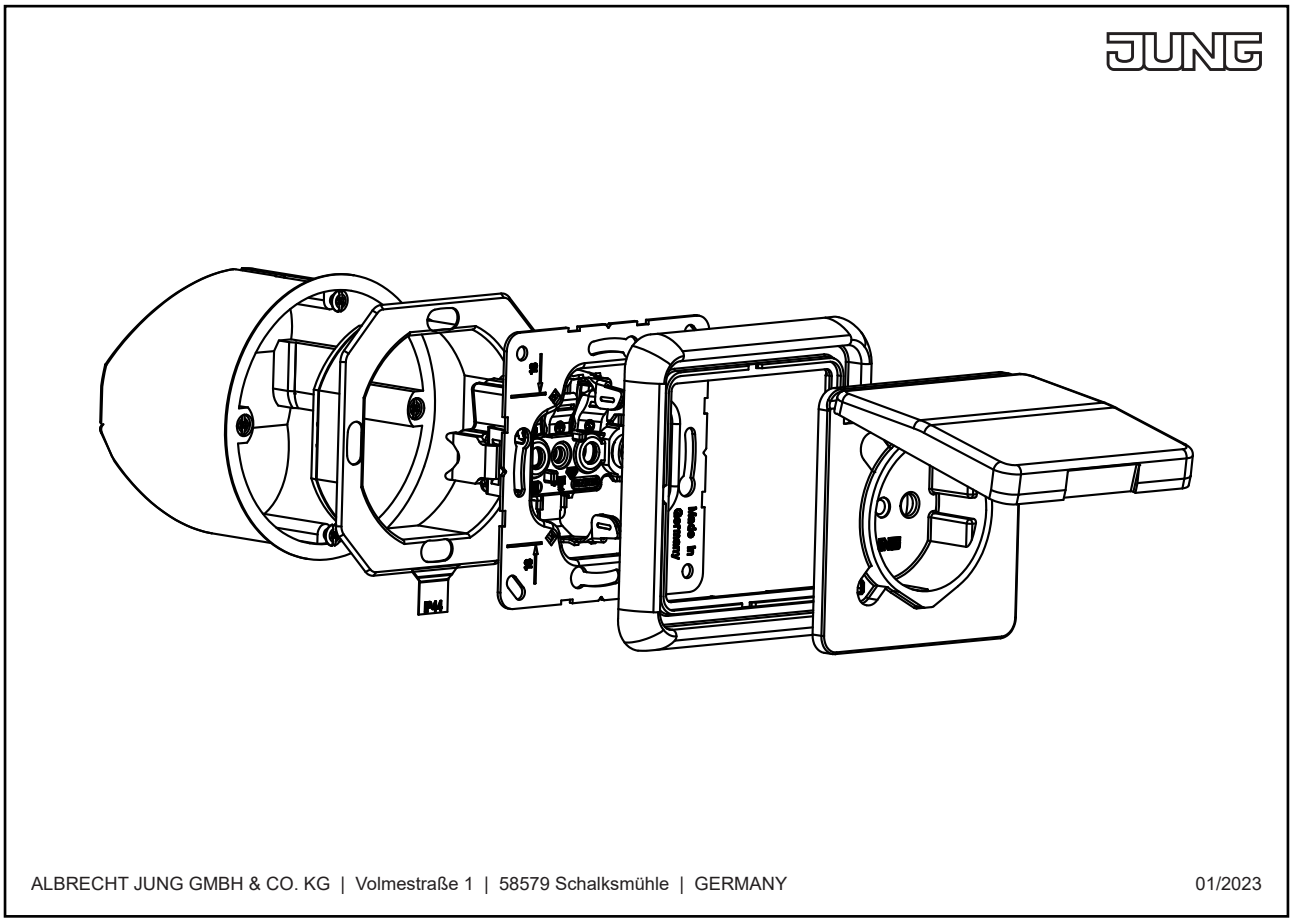

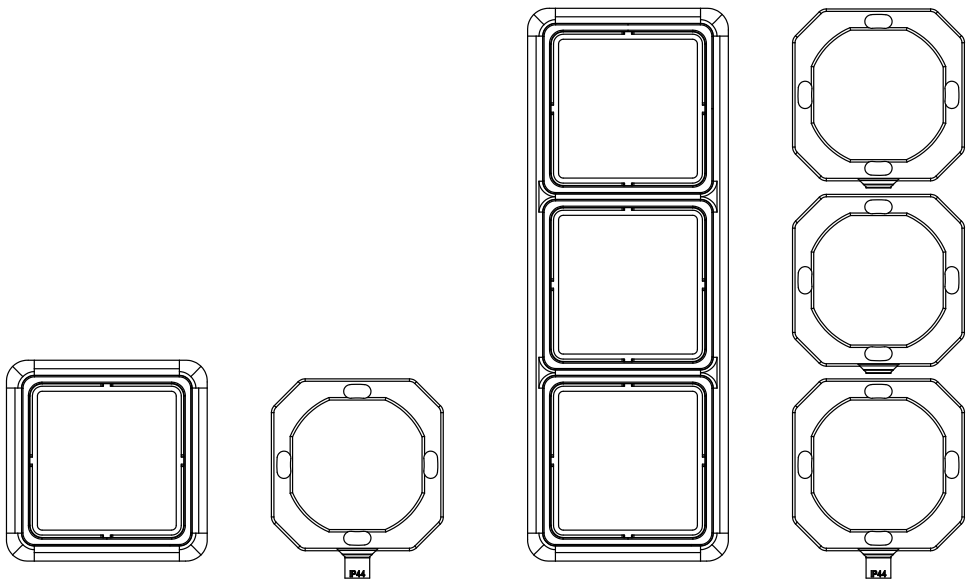

ALBRECHT JUNG GMBH & CO. KG | Volmestraße 1 | 58579 Schalksmühle | GERMANY 01/2023

ALBRECHT JUNG GMBH & CO. KG
Volmestraße 1
58579 Schalksmühle

Phone +49 (0) 23 55/80 60
E-Mail kundencenter@jung.de