# SCHUKO® socket, 16 A 250 V ~, Safety Plus, thermoplastic, AS/A range, white



| | |
|---|---|
| **Reference number:** | A 1520 BFKI WW |
| **EAN/GTIN:** | 4011377057647 |
| **Color:** | white |
| **Material:** | thermoplastic |

Individual colour printing possible
Individual laser engraving possible

**Thermoplastic (breakproof) high-gloss**
**with enhanced contact protection / shutter (Safety Plus)**
with screwless terminals for rigid and untreated flexible wires up to 2.5 mm$^2$

without claws: ref.-no. with additional "N", e.g.: ..1520 N..
with screw terminals: ref.-no. ..1521..
Supporting frame, claws and claw screws are integrated into the earth protection.

Cradle to Cradle certified

## Dimensions

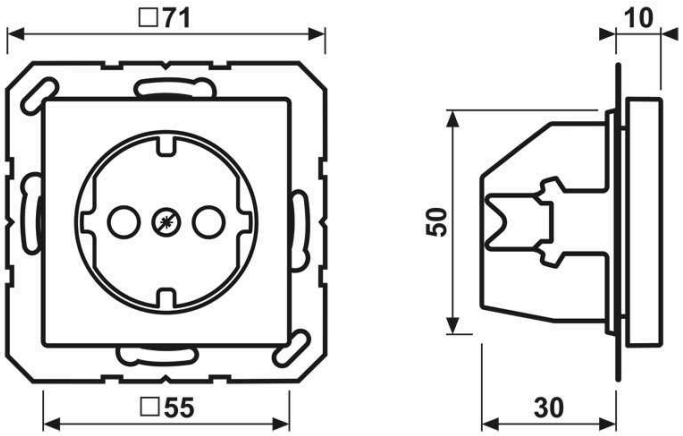


**ALBRECHT JUNG GMBH & CO. KG**
Volmestraße 1
58579 Schalksmühle

Phone +49 (0) 23 55/80 60
E-Mail kundencenter@jung.de

## Assembly

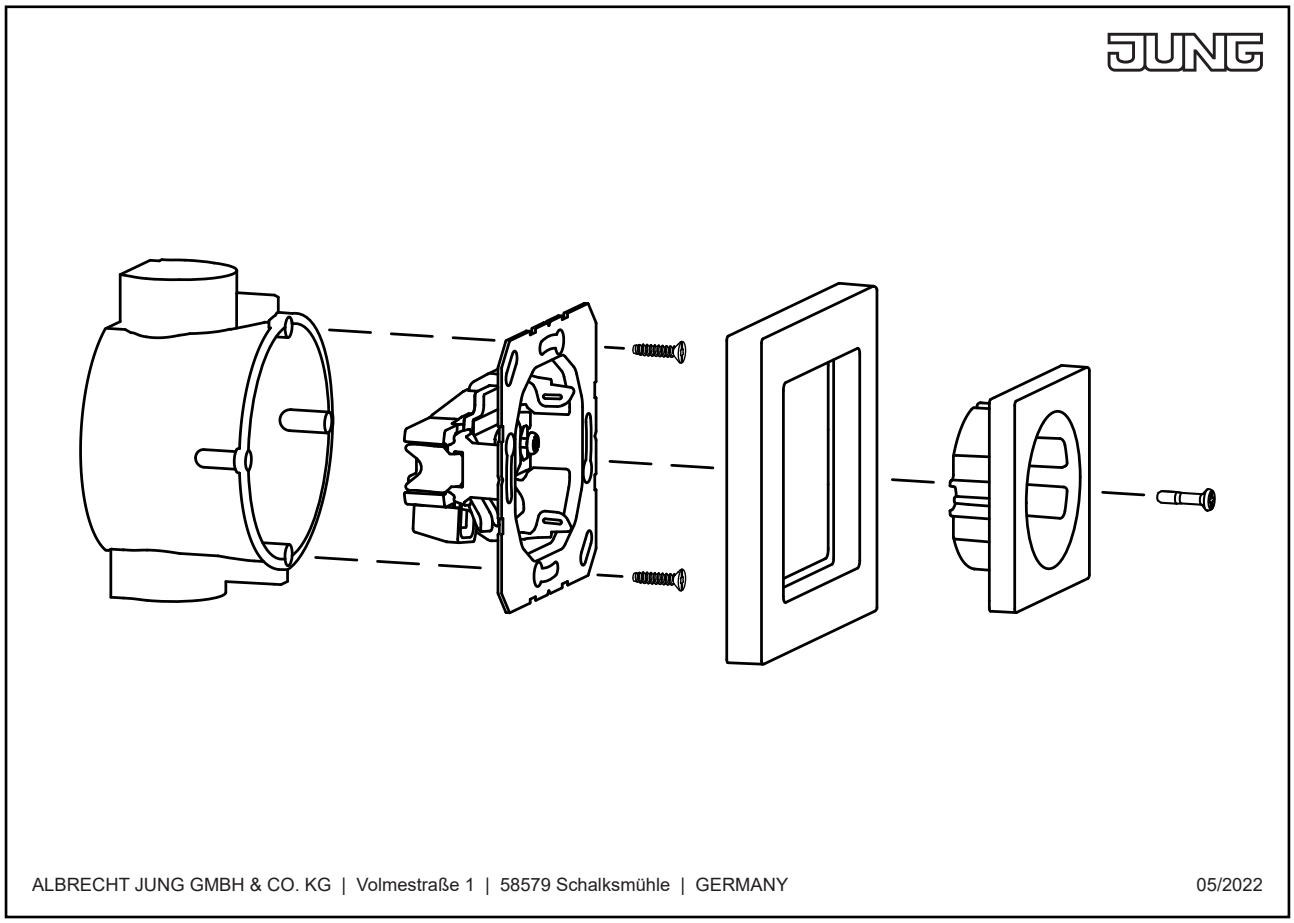


**Notice!**
**Installation only by persons with relevant electrical knowledge and experience!*)**
**Use only with original JUNG product components approved for this article.**
By inappropriate installation you endanger
• your own life,
• the life of the user of the electrical appliance.
By inappropriate installation you risk a high loss by damage, e.g. risk by fire.
You assume personal liability in cause of injury to persons or damage of appliances.
**Please contact a skilled electrician!**

***) Required technical knowledge for installation:**
For installation, especially the following technical knowledge is required:
• the 5 important safety rules: disconnect from mains, secure against reconnecting, verify parts are free of voltage, ground and short-circuit, cover or block off adjacent live parts
• select adequate tools, measuring devices and personal protective equipment
• evaluate measuring results
• selection of the electrical installation material to secure switch-off conditions
• IP protection levels
• installation of the electrical installation material
• type of electric power grid (TN system, IT system, TT system) and the resultant connection terms (common grounding, protective ground, required additional action etc.)