Rocker 1-gang, symbol "light", thermoplastic, A range, white



Reference number:	A 590 BF L WW
EAN/GTIN:	4011377103177
Color:	white
Material:	thermoplastic

Degree of protection IP44 is ensured with sealing gasket ref.-no. 551 WU and "IP44 frame" of the respective design range.

Thermoplastic (breakproof) high-gloss
for switch ref.-no.: 501 U, 502 U, 503 U, 506 U, 507 U, 501-20 U, 506-20 U, 507-20 U
for push-button ref.-no.: 531 U, 532 U, 533 U, 533-2 U

Spare part:
Spare part:
holder plate ref.-no.: AS 90 HP

For illuminated inserts use rocker with lens ref.-no.: ..KO...

Dimensions

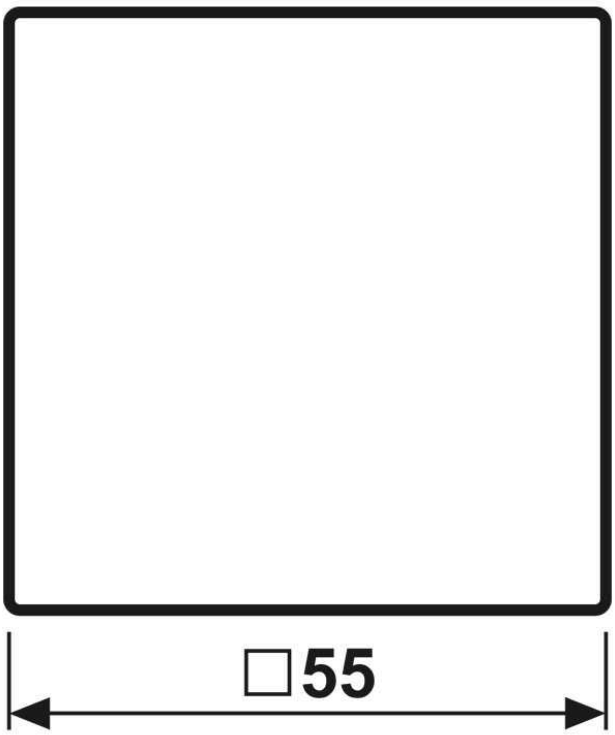

ALBRECHT JUNG GMBH & CO. KG
Volmestraße 1
58579 Schalksmühle

Phone +49 (0) 23 55/80 60
E-Mail kundencenter@jung.de

Assembly

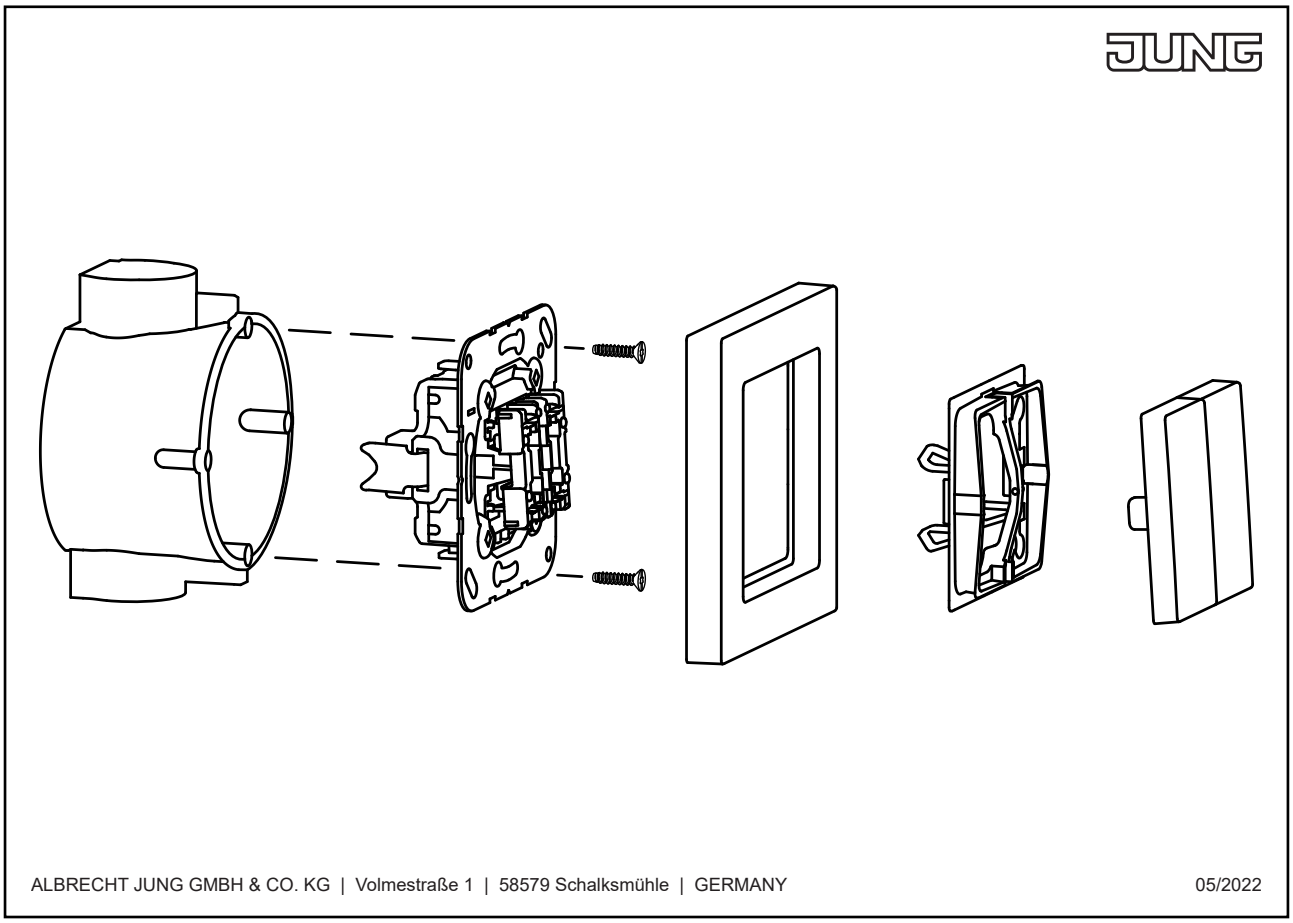
ALBRECHT JUNG GMBH & CO. KG | Volmestraße 1 | 58579 Schalksmühle | GERMANY
05/2022