Operating instructions

JUNG HOME presence detector
Art. no. BT17361..



ALBRECHT JUNG GMBH & CO. KG
Volmestraße 1
58579 Schalksmühle
GERMANY

Telefon: +49 2355 806-0
Telefax: +49 2355 806-204
kundencenter@jung.de
www.jung.de

Product image non-binding

13.08.2025
82405523 J0082405523

Table of contents

1 Safety instructions 3
2 Device components 4
3 Intended use 4
4 Product characteristics 5
5 Functional description 6
6 Wireless operation 7
7 Operation via extensions 7
8 Mounting and electrical connection 7
9 Commissioning with app 12
10 Resetting the device to the default settings 14
11 Technical data 16
12 List of functions and parameters 16
13 Troubleshooting 25
14 Conformity 27
15 Warranty 27

1 Safety instructions

To avoid potential damage, read and follow the following instructions:



Installation only by persons with relevant knowledge and experience in the following areas:

- Five safety regulations and standards for the installation of electrical systems
- Selection of suitable tools, measuring devices, installation materials and, if necessary, personal protective equipment
- Installation of the installation material
- Connection of devices to the building installation under consideration of local connection conditions

Improper installation endangers your own life and the lives of people using the electrical system and there is a risk of serious damage to property, e.g. through fire. You are at risk of personal liability for personal injury and damage to property.
Consult an electrically skilled person.

Danger of electric shock. If the device exhibits any visible damage, it must not be used any longer. Immediately disconnect device from mains by switching off all associated circuit breakers.

Danger of electric shock. Device is not suitable for disconnection from supply voltage because – depending on the insert used – mains potential even is applied on the load when the device is switched off. Always disconnect before carrying out work on the device or load. To do so, switch off all associated circuit breakers.

Do not press on the sensor window. Device can be damaged.

The device must not be used for applications from the field of safety engineering, such as emergency stop, emergency call or smoke extraction.

The device is not suitable for use as a burglar alarm or other alarm.

Instructions are part of the product, so keep them in a safe place.



You can find more information on JUNG HOME at www.jung.de/JUNGHOME

2 Device components

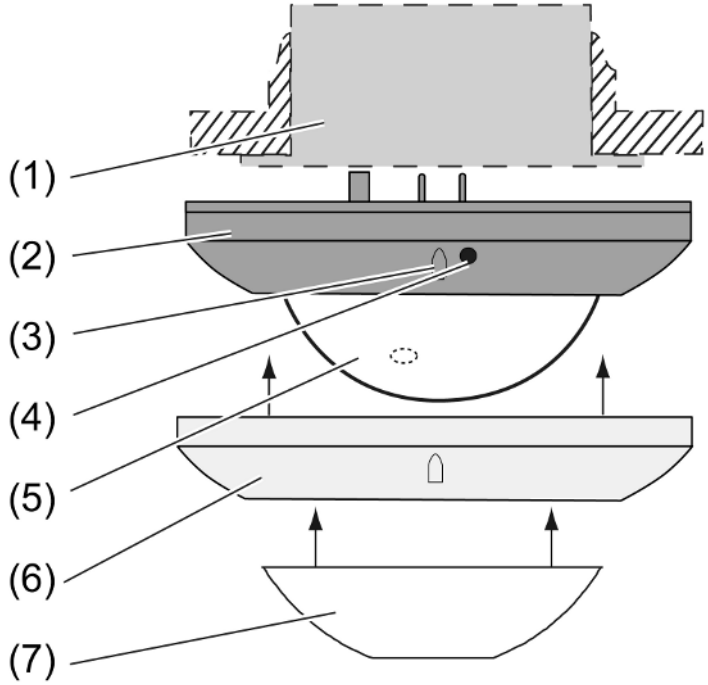

Figure 1: Device components

(1) System insert
(2) Sensor cover
(3) Brightness sensor
(4) Button **Prog.**
(5) Sensor window with status LED
(6) Decor ring
(7) Push-on cover

LED indication during operation

Red	Disabling function active, e.g. continuously on/off, motion detected while "walking test" activated
Blue, triple flashing	Time has not been set, e. g. due to extended power failure
Flashing green/red	Device update is being performed
Red, triple flashing	Error message (cover was previously connected to another system insert)
Sequentially flashing red/green/ amber	Self-test is being executed

3 Intended use

– Automatic switching of lighting depending on the heat motion and ambient brightness

- Wireless connection to devices from the JUNG HOME system
- Operation with system insert for switching or dimming, or 3-wire extension
- Ceiling installation on system insert

4 Product characteristics

- Commissioning and operation using JUNG HOME app on mobile end device (smartphone or tablet) via Bluetooth
- Extension of the detection field by the combination of several JUNG HOME motion detectors or via the extension input
- Panel for limiting the detection field
- Multi-colour status display
- Disabling of the **Prog.** button
- Free linking of the motion sensor with the load output in the system insert or wirelessly with further JUNG HOME devices
- Up to 16 time programs control the functions of the respective system insert (switch on, switch off)
- Time programs with sunrise and sunset (astro timer)
- Disabling function and restraint: continuously ON/OFF or ON/OFF for fixed time
- Staircase lighting function (automatic switch-off) with switch-off warning
- Run-on time, switch-on delay, switch-off delay
- Activate/deactivate automatic functions with the JUNG HOME app
- Automatic date and time update when connecting with smartphone
- Maximum brightness and minimum brightness adjustable, with dimming insert
- Switching on with last brightness or fixed switch-on brightness, with dimming inserts
- Warm dimming (changing the colour temperature with simultaneous brightness increase), with DALI insert
- Integration of the load into areas (groups), main functions and scenes
- Evaluation of the extension inputs (if present) to control the system insert
- Bluetooth SIG Mesh for fully encrypted wireless communication and repeater function
- Updating via JUNG HOME app

Available by update in the future:

- Night light function with period for brightness reduction, with dimming insert
- Hotel function (orientation light instead of OFF), with dimming insert
- Constant light regulation
- Calling up a scene by motion

You can find information on updates and dates at www.jung.de/JUNGHOME

Behaviour after a mains voltage failure

All settings and time programs are retained. Missed switching times are not performed later. The load output or the system insert outputs are switched off, provided the parameter "Switching status after mains voltage returns" is set to its default setting.

After mains voltage return, the device performs a self-test for a maximum of 20 seconds. After the self-test has been completed, the device is ready for operation.

If the device was not previously added to a Bluetooth Mesh network (project) by means of the JUNG HOME app, it will switch to pairing mode for two minutes after the mains voltage returns and the status LED will flash slowly at a regular interval in blue.

The following applies during the self-test:

- Movements are not detected
- Operation via extensions and with the JUNG HOME app is possible

Power failure shorter than power reserve (min. 4 hours)

- Time and date are up to date
- The following time programs are performed normally again

Power failure longer than power reserve (min. 4 hours)

- If the LEDs flash three times repeatedly, the time is not up to date and must be updated by connecting to the app.
- The time programs are not executed as long as the time is not up to date

5 Functional description

The device detects heat motions of people, animals and objects.

- The lighting is switched on if a person enters the detection field and the brightness threshold is below the set brightness threshold.
- The run-on time restarts with each detected motion.
- The lighting is switched off if no more movement is detected in the detection field and the run-on time has elapsed.
- The lighting is switched off if the ambient light is too bright and the run-on time has elapsed.
  The device also calculates the brightness value at which lighting is no longer necessary. This brightness value consists of the difference between the brightness before and after switching on the lighting, a defined offset and the set brightness threshold.

To avoid any switch-on caused by a cooling lamp, no movement signals are evaluated for a brief lockout time after switching off. The motion detector adjusts itself to the ambient conditions to keep the time as short as possible.

6 Wireless operation

Wireless operation is carried out with linked JUNG HOME devices or via the JUNG HOME App, which is also used to link JUNG HOME devices (see ‘Commissioning with app’).

7 Operation via extensions

Prerequisite:
A push-button, an Satellite insert 2-wire with an LB Management push-button 1-gang or an Satellite insert 3-wire, power supply with an LB Management push-button 1-gang or LB management motion detector is connected. Multiple extensions can be combined with each other. Operation with the Rotary satellite insert 3-wire is described in the rotary extension instructions.

If no run-on time (load) is set, the load either switches alternately ON/OFF or specifically ON at the top and OFF at the bottom, depending on the extension used.

Switching on a load for the duration of the run-on time

- Press the operating cover at the top or the push-button briefly or LB management motion detector detects a movement.

The run-on time is restarted by pressing again or detecting the movement again.

If the load is supposed to be able to be switched off manually, the parameter "Manual switch-off of run-on time" must be activated.

Adjust the brightness, only in combination with dimming insert

- Press and hold the operating cover at the top or bottom or the push-button. In the case of a push-button, the dimming direction is changed with each new long actuation.

8 Mounting and electrical connection

The communication of the JUNG HOME devices and linked mobile end devices is carried out in wireless mode within the range of the Bluetooth Mesh network.

Wireless signals can be affected in their range by:

– Number, thickness, position of ceilings, walls and other objects
– Material type of these objects
– High-frequency interfering signals

Observe the following fitting instructions to maximise the range:

– Plan the positions and number of JUNG HOME devices to keep the number of ceilings and walls between two devices as low as possible

- If JUNG HOME devices are installed on both sides of a solid wall, they should be positioned as close as possible to each other on the opposite sides of the wall. This keeps the attenuation of the wireless signal through the wall as low as possible
- When planning, observe that the number of building materials and objects that attenuate the wireless signal strongly (e. g. concrete, glass, metal, insulated walls, water tanks, pipelines, mirrors, book cabinets, storage rooms and refrigerators) on the connection line between JUNG HOME devices is as low as possible
- Keep a distance of at least 1 m from devices that emit high-frequency signals (e. g. microwave, motors) or run with wireless signals at 2.4 GHz (e.g. WLAN router, baby monitor, IP cameras, wireless loudspeakers etc.)

Detection field and range

The device has a detection field of 360°. The diameter of the detection field depends on the installation height and the direction of motion of persons in the detection field. The detection field becomes larger the greater the installation height, while the detection density and sensitivity are reduced at the same time.

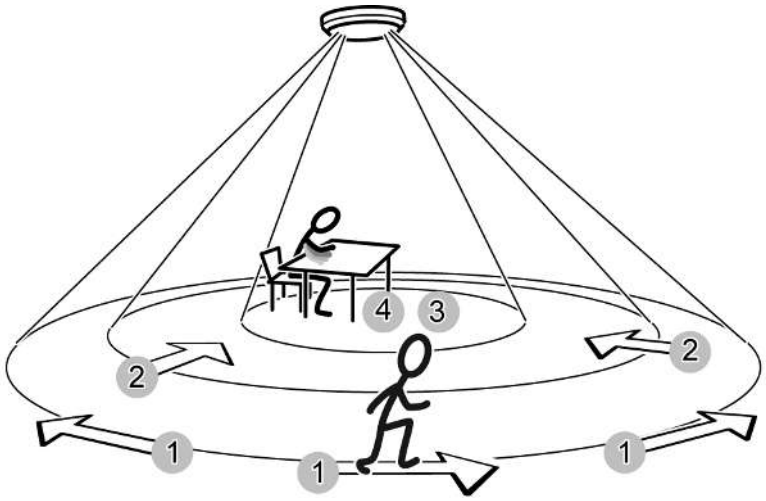

Figure 2: Detection range depending on the direction of movement

Diameter of detection field depending on direction of movement (see figure 2)

Installation height	1:	2:	3:	4:
2.20 m	14.50 m	11.50 m	8.00 m	6.00 m
2.50 m	16.50 m	13.00 m	10.00 m	7.00 m
3.00 m	20.00 m	16.00 m	12.00 m	8.00 m
3.50 m	23.00 m	18.50 m	14.00 m	9.00 m
4.00 m	26.00 m	17.00 m	14.50 m *)	– *)
5.00 m	28.00 m	18.00 m	15.00 m *)	– *)
6.00 m	29.00 m	19.00 m	– *)	– *)

1: Range for tangential movement on the ground

2: Range for radial movement on the ground

3: Range for typical movements at desks, e.g. torso movement

4: Range of fine detection at desks, e.g. mouse movements

*) When used as a presence detector: Installation height should not be more than 3.5 m, otherwise fine detection is not possible.

Installation location

For use as a presence detector, the device is installed, for example, above a workplace and monitors the surface below it. For use as a motion detector, the device is installed, for example, in the hallway.

- Select a vibration-free installation location. Vibrations can lead to unwanted switching.
- Avoid heat sources in the detection field. Heat sources can trigger the motion detector, e.g. heating units, outlets of ventilation systems or air conditioners, copiers, printers, coffee machines, draughty doorways, animals, etc.

To minimise the influence of heat sources, reduce the sensitivity or limit the detection field by switching off individual sensors (JUNG HOME app) or using the push-on cover (7).

Aligning cover

The device has three independent sensors for motion detection (see figure 3). The arrangement of areas A, B and C is clearly evident under the decor ring (6) (see figure 4).

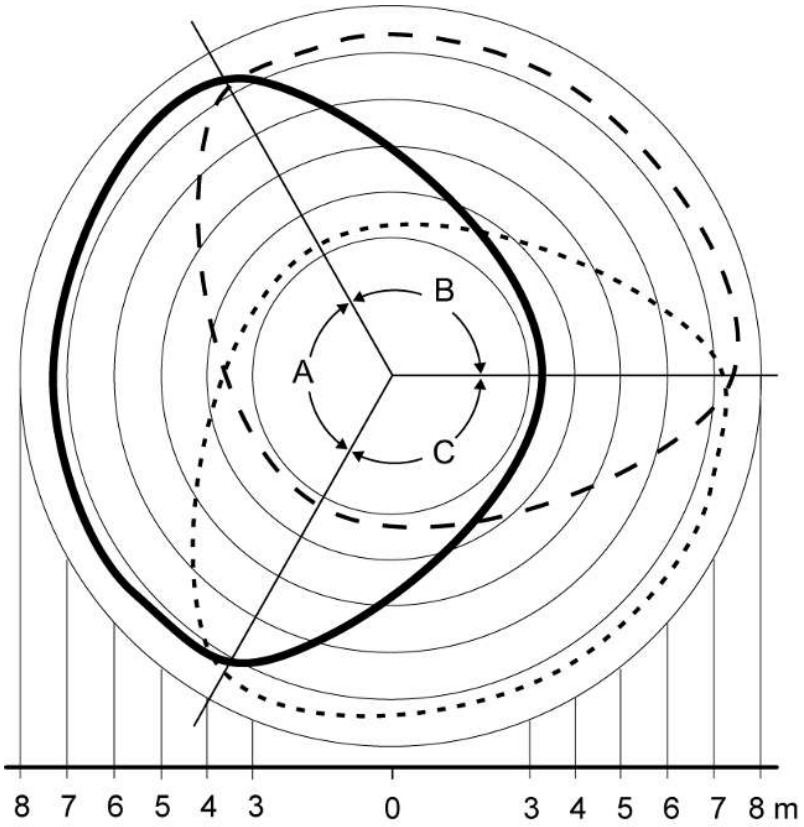

Figure 3: Detection field: areas A, B and C; installation height 2.20 m

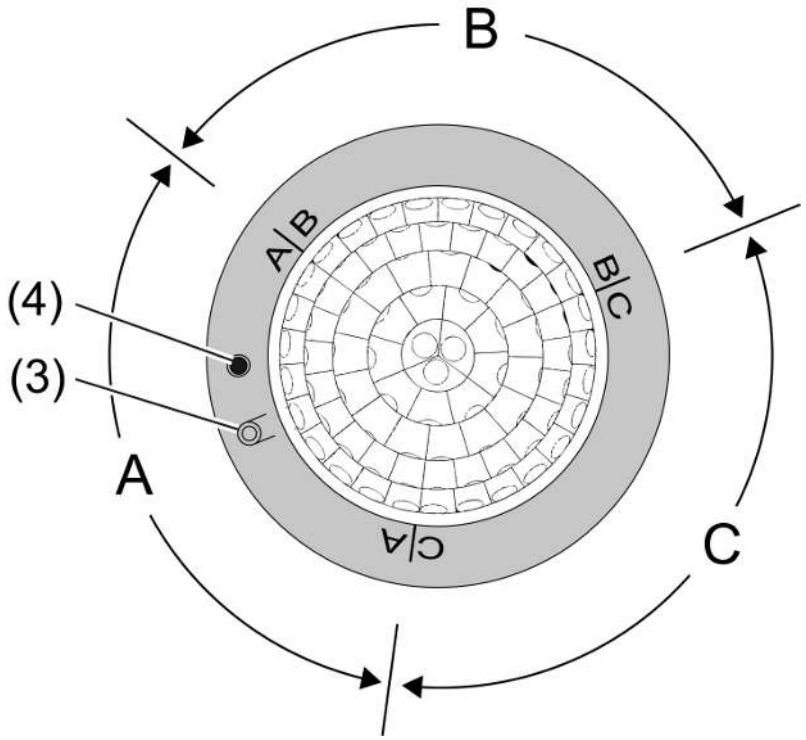

Figure 4: Arrangement of the areas A, B and C

- Pay attention to correct alignment when mounting the appliance box and system insert.
- Align the cover so that the brightness sensor (3) is on the side away from the windows. This reduces the effects of scattered light.

Mounting and connection

DANGER!

Electric shock when live parts are touched.

Electric shocks can be fatal.

Always disconnect before carrying out work on the device or load. To do so, switch off all corresponding circuit breakers, secure them against being switched on again and check that there is no voltage. Cover up any adjacent live parts.

Prerequisite: The system insert (1) is connected (see instructions for the system insert) and installed in accordance with the alignment of the sensor cover (2).

- Fit the sensor cover (2) on the system insert (1).
- Switch on mains voltage.

  An system insert-cover alignment is executed.

If the status LED (5) flashes red three times at repeated intervals, the cover was previously connected to another system insert. To enable operation again, perform one of the following steps:

- Fit the cover on the original system insert.
- If the system insert is of the same type: press the **Prog.** button (4) for more than four seconds. The parameter settings and app and network connection are retained.
- With a system insert of a different type: reset the cover to the default setting. The parameter settings and app and network connections are retained.

Checking detection field

- Activate the walking test via the app and pace off the detection field. The function is active for approx. five minutes.

If movements are detected, the status LED (5) lights up in red and this is indicated in the JUNG HOME app. The linked lighting switches according to the current configuration.

Expanding the detection field

The detection field can be expanded wirelessly. For this purpose, use the three-wire extension with JUNG HOME presence or motion detectors and link it with the JUNG HOME app to the main unit. Alternatively, connect the three-wire extension with LB management presence or motion detectors to the main unit with the JUNG HOME presence or motion detector via an extension line. In both cases, the main unit evaluates the signals of the extension and switches on the lighting.

Limiting the detection field using the push-on cover

The push-on cover (7) can be used to limit the detection field, e. g. in order to mask out interference sources.

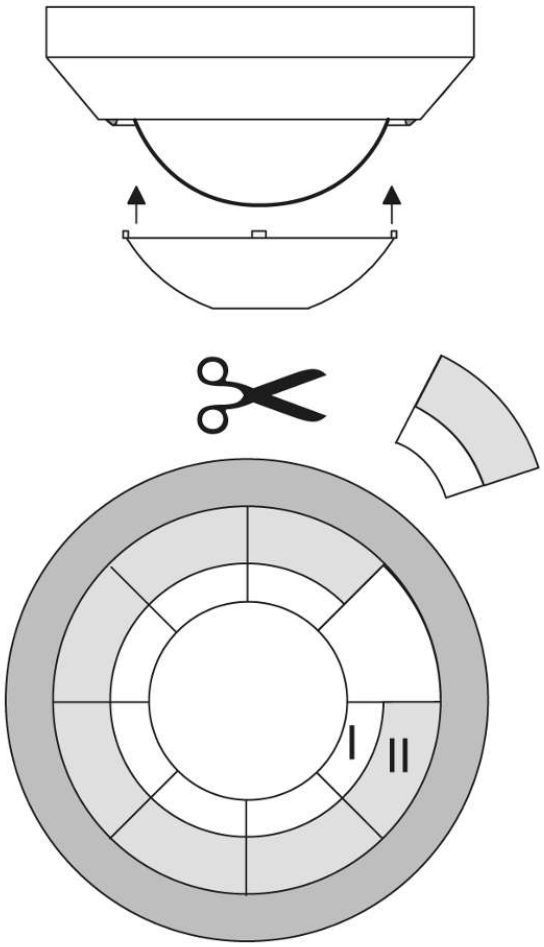

Figure 5: Push-on cover

Size	Range on the ground (mounting height 3 m)
Complete push-on cover	Ø approx. 4.5 m
Area I cut out	Ø approx. 7.5 m
Areas I + II cut out	Ø approx. 12 m
without push-on cover	Ø approx. 20 m

- Pull off push-on cover.
- Using scissors, cut out push-on cover along the marked lines as required.
- Push on push-on cover.

Alternatively, the detection field can also be limited via the app by reducing the sensitivity or switching off individual sensors.

9 Commissioning with app

Prerequisite: the JUNG HOME device is not yet part of a Bluetooth Mesh network; otherwise reset the device to default settings.

If no project (Bluetooth Mesh network) to which the device is to be added exists yet, a new project must be created in the JUNG HOME app.

If there is already a project (Bluetooth Mesh network) to which the device is to be added, the corresponding project file must be open in the JUNG HOME app.

After switching on the mains voltage, the device is automatically in pairing mode for two minutes.

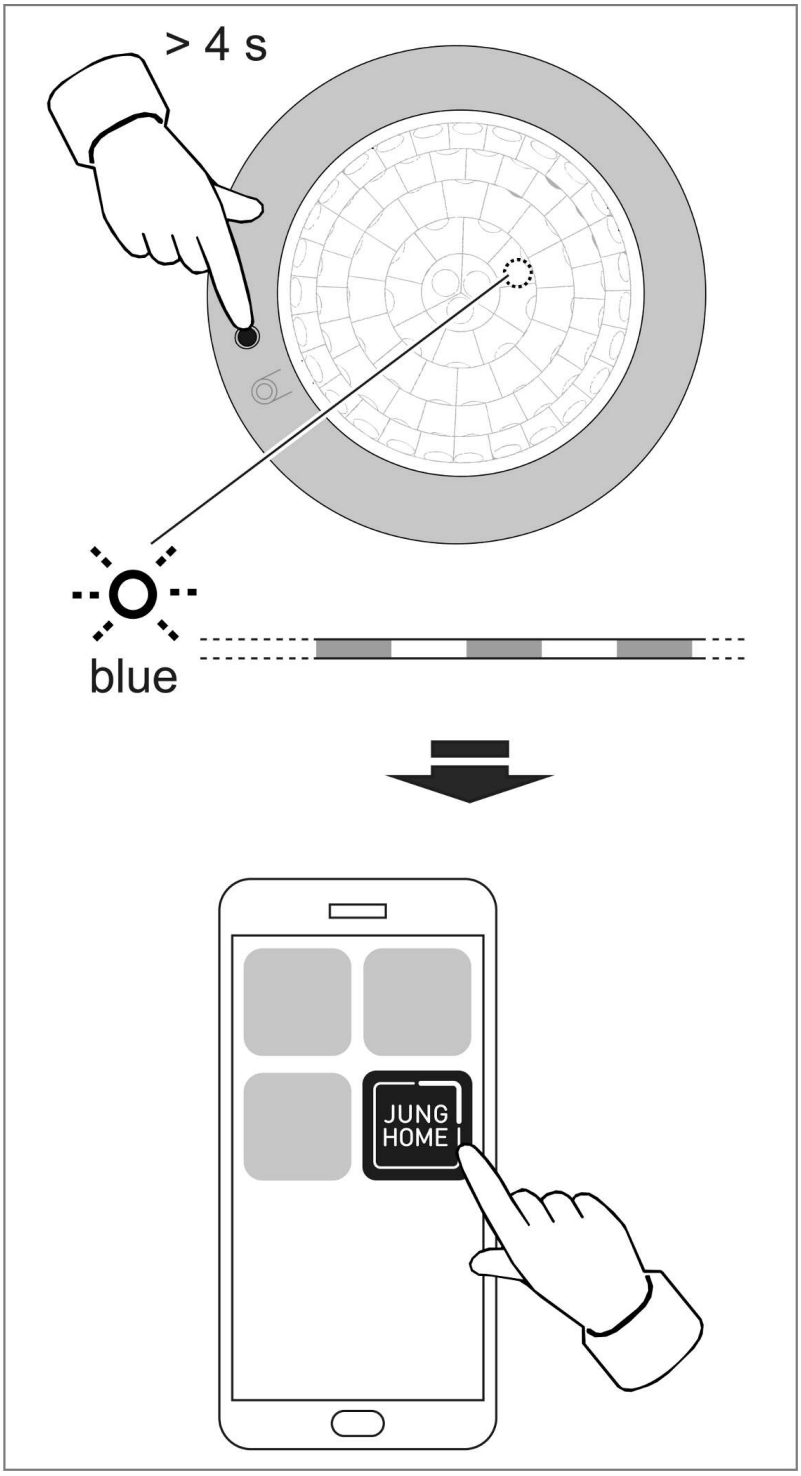

Figure 6: Commissioning

- Activate pairing mode manually:
  Press the button (4) for more than four seconds.

The status LED (5) flashes slowly in blue. Pairing mode is active for two minutes.

- Start the **JUNG HOME app** and press "**+**".
  The app shows all devices in pairing mode.
- Select a device in the app.
  To identify the selected device, its status LED flashes more quickly in blue.
- Add the device to the project.

  The status LED lights up in blue for five seconds to confirm that pairing was successful.

  If the status LED flashes red very fast, pairing has failed and needs to be re-tried.

The JUNG HOME app can then be used to link devices wirelessly and configure the parameters and operation (see list of functions and parameters).

Once the commissioning of the JUNG HOME project has been completed, hand over the project file to the customer.

Besides basic commissioning, the JUNG HOME app enables device updates and convenient operation of further individual configuration options:

– Link: A button, binary input or a motion or presence sensor can be controlled by linking it to a load (e. g. dimmer, socket, switching output, shutter, etc.). Several loads can be controlled together by linking them to an area or scene.
– Area: Different loads (e. g. dimmer, socket, switching output, shutter, etc.) can be grouped in an area to allow them to be controlled together.
– Scene: Different loads (e. g. dimmer, socket, switching output, shutter, etc.) can be grouped in a scene so that, by calling up a scene, each load assumes the load status stored in the scene.
– Automatic function: An automatic function can be used to control the locally connected load (no wireless link) by means of time programs. Depending on the device type, there are further automatic functions in JUNG HOME, such as hotel function, night light function or switching thresholds.

10 Resetting the device to the default settings

If the button **Prog.** (4) is disabled with the "operating lock" parameter, the default setting can be reset to only within two minutes after switching on the mains voltage.

If the device has already been added to a project via the JUNG HOME app, it can be removed from the app with the "Delete device" function and reset to the default setting in one step.

If the device cannot be reset to the default settings with the app, reset the device as follows:

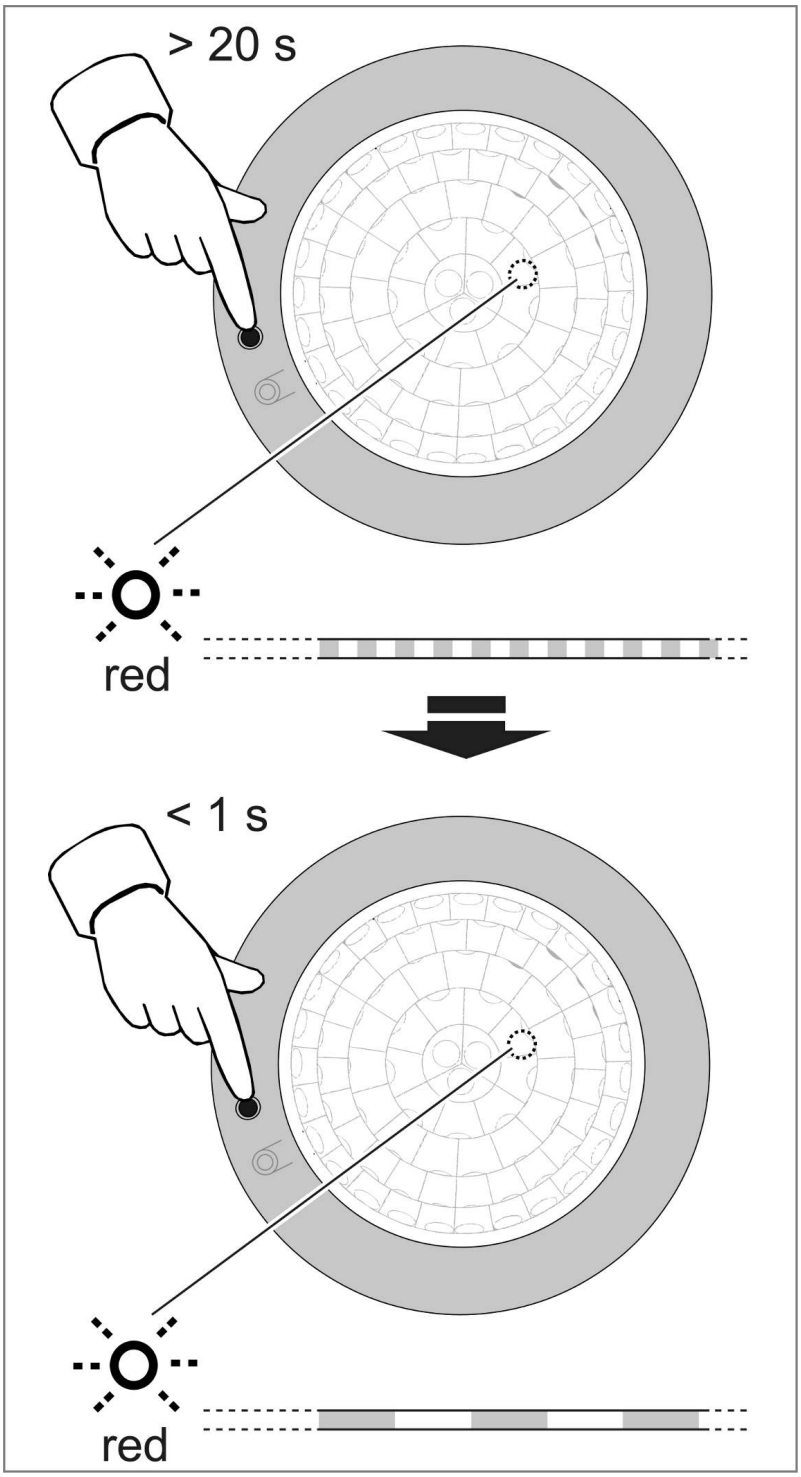

Figure 7: Factory reset

- Press the button (4) for more than 20 seconds until the status LED flashes quickly in red.
- Release the button (4) and press it briefly again within ten seconds.

  The status LED flashes in red more slowly for approx. five seconds. The device has been reset to the default setting.

  The status LED flashes blue slowly; the device is in pairing mode.

After resetting the device to the default setting, it must be removed from the JUNG HOME app provided it has not already been deleted from the app.

Default settings (selection)

Function	Setting
Sensitivity of sensors A to C	100%
Detection angle	360°
Brightness threshold	150 lux
Run-on time (load)	2 minutes

11 Technical data

Ambient temperature	-5 ... +45 °C
Transport temperature	-25 ... +70 °C
Storage temperature	-5 ... +45 °C
Relative humidity	20 ... 70% (no moisture condensation)
Accuracy per month	± 13 s
Power reserve	min. 4 h
Dimensions Ø×H	103 × 66 mm
Detection angle	360°
Detection field (installation height 3 m)	Ø approx. 20 m
Sensitivity	0, 25, 50, 75, 100%
Brightness threshold	Approx. 5 ... 1000 lx (and day operation)
Run-on time	Approx. 1 s ... 240 min
Radio frequency	2.402 ... 2.480 GHz
Transmission capacity	max. 10 mW, Class 1.5
Transmission range (inside building)	Typ. 30 m

This device includes an integrated battery. At the end of its useful life, dispose of the device together with the battery in accordance with the environmental regulations. Do not throw device into household waste. Consult your local authorities about environmentally friendly disposal. According to statutory provisions, the end consumer is obligated to return the device.

12 List of functions and parameters

The JUNG HOME app can be used to configure all functions of the JUNG HOME device and its behaviour in the Bluetooth Mesh project for the respective individual purposes.

One or more devices are created in the app when commissioning with the app, depending on the system insert used:

– A device that maps the sensor cover and includes its functions and parameters.
– A device that maps the system insert used and its load control with all the corresponding functions and parameters. With a two-channel system insert, two devices are used. With a 3-wire extension system insert, no further device is created.

All devices created in the JUNG HOME app can be used independently and set separately.

Presence detector settings (cover/sensor) ⊙

Parameters	Setting options, default setting	Explanation
Brightness measurement mode	Measurement at the installation location, measurement of the room brightness Default setting: measurement at the installation location	If the brightness measurement is set to "measurement at installation location", the light that falls on the sensor is measured directly. If the brightness measurement is set to "measurement of room brightness", the brightness in the room light is measured.
Detection setting of sensors A to C	0, 25, 50, 75, 100% Default setting: sensors A to C 100%	Graphically in the detailed device view for each sensor A to C, individually adjustable in five stages. To limit the detection field to 120° or 240°, set the sensitivity of the fields to be deactivated to 0%.
Operating location	Indoors, outdoors Default setting: indoors	Set this setting to outdoors to further reduce the sensitivity of the sensor if the device is used outdoors or in environments with interference sources.
Brightness threshold	5 ... 1,000 lx and day operation Default setting: 150 lx	The load is switched on if the brightness value falls below this value and if motion is detected. In the "day operation" setting, the device reacts brightness-independently to any movement.
Sensor values for IoT systems	Off, On	Sensor values for IoT systems
Walking test	Off, on for 5 min Default setting: Off	The walking test can be used to test whether the detection field and the sensitivity of the sensors are set correctly. If movements are detected, the status LED lights up in red and this is indicated in the JUNG HOME app. The linked lighting switches according to the current configuration. The function is deactivated automatically after approx. 5 minutes.

Parameters	Setting options, default setting	Explanation
Operating lock	No lock, factory reset lock Default setting: no lock	Factory reset lock: prevents resetting on the device and hence the removal from a project and pairing again by unauthorised persons. After the mains voltage returns, the factory reset lock is deactivated for two minutes. Operation via the app remains possible. The operating lock cannot be deactivated on the device.
Constant light regulation**	Off, On Default setting: Off	This comfort function can be used to control dimmable room or desk lighting to ensure the presence detectors installed above the workplace provide constant brightness in spite of the outdoor light changing. The presence detector determines the brightness value from artificial light and daylight. It is kept constant at the set brightness level by controlling linked dimming and DALI inserts accordingly.
Constant light regulation brightness**	10 ... 2,000 lx Default setting: 600 lx	If "constant light control" is activated, the JUNG HOME presence detector sets the linked dimming and DALI inserts to this set brightness.

** Available by update in the future: You can find notes on updates and dates at www.jung.de/JUNGHOME

Load control settings (system insert)

Settings for automatic functions

Parameters	Setting options, Factory setting	Explanations
Time programs	Load status, time and weekdays	The load status can be changed at defined times (weekdays and time) depending on the system insert.
Astro timer	Off, sunrise or sunset Default setting: Off	The astro timer shows the sunrise and sunset times in the course of a calendar year. Depending on the location, load statuses can be changed with the position of the sun, for example to switch on the outdoor lighting at sunset and switch it off again at sunrise.

Parameters	Setting options, Factory setting	Explanations
Astro timer, time shift	0 (off) ... 120 minutes before or after sunrise and sunset Default setting: Off	Astro times represent the sunrise and sunset times in the course of a calendar year. If you want the time program to be executed in the early morning before the start of twilight or only at full brightness, this can be implemented with the "sunrise" shift. If you want the time program to be executed in the evening at the start of twilight or only at full darkness, this can be implemented with the "sunset" shift. Displaces the load actuation time by the set value.
Astro timer, limit range	Off, earliest time, latest time default setting: off	To narrow the time range of an astro timer down to an earliest and/or latest execution time. For example, the garden lighting can be switched off at the latest at 9:00 p.m. even if the sun does not set until 10:00 p.m.
Set the location	Geographic location	The astro timer in the JUNG HOME devices needs the geographic location of the project to calculate the sunrise or sunset time. The astro timer is calculated once a week for the localised place.

Additional settings for switch inserts

Parameters	Setting options, default setting	Explanation
Switch-on delay	0 s (off) ... 240 min Default setting: Off	Switches on the load after a switch-on command, delayed by the value. Repeated switch-on commands during the current delay do not start the delay again. If the load has not yet been switched on due to the delay, the load remains switched off when a switch-off command arrives.

Parameters	Setting options, default setting	Explanation
Switch-off delay	0 s (off) ... 240 min Default setting: Off	Switches off the load after a switch-off command, delayed by the value. A switch-off command during the current delay immediately switches the load off. If the load has not yet been switched off due to the delay when a switch-on command comes, then the load will remain on.
Switch-off warning	Off, On Default setting: Off	If the switch-off warning is switched on, the light is not immediately switched off after the run-on time (load) elapses. Triple flashing at an interval of 10 seconds shows that the light will be switched off soon. The run-on time is thereby prolonged by approx. 30 seconds. If a movement is detected by a linked JUNG HOME sensor cover or the load switched on again by operating an extension or by a linked JUNG HOME operating cover during the switch-off warning, the run-on time is restarted and the light remains on.
Run-on time (load)	0 s (off) ... 240 min Default setting: Off	Ensures that the load is switched off after the set run-on time expires instead of remaining permanently switched on after a switch-on command. If a movement is detected by a linked JUNG HOME sensor cover during the run-on time or the operating cover is switched on again by operating an extension or a linked JUNG HOME operating cover, the run-on time is restarted and the light remains on. The load can be switched off early during a running run-on time only if the "Manual switch-off during run-on time" parameter is set to "On" or a disabling function (continuous OFF) is started.

Parameters	Setting options, default setting	Explanation
Manual switch-off during run-on time	Off, On Default setting: On	If this parameter is set to "On", it is possible to switch off the load manually during a current "run-on time (load)". For an automatic staircase lighting controlled by JUNG HOME operating and/or sensor covers, this parameter should be set to "Off" to prevent the light from being switched off by a second person.
Invert switching output	Off, On Default setting: Off	Inverts the switching output from NO contact function (on = switching output closed) to NC contact function (On = switching output open). This parameter only inverts the behaviour of the load output. Neither the switching commands from the JUNG HOME operating or sensor covers nor the display of the switching statuses in the app are taken into account.
Minimum switching repeat time	100 ms ... 10 s Default setting: 100 ms	Limits the switching speed of the device by increasing the value, in order to protect the connected load, for example. Only when the set time has elapsed is switching possible again. The last command during the blocking time is executed after a delay. The switching repeat time starts after each switching operation.
Behaviour after mains voltage return	Switched off, switched on, previous status Default setting: switched off	Behaviour of the load output after the mains voltage returns. Note: Do not use the "switched on" setting in combination with consumers that could lead to danger to life or limb or damage to property.
Disabling function (restraint)	Deactivated, continuously ON, continuously OFF, for fixed time ON/OFF Default setting: deactivated	The disabling function switches the load output to the desired status and blocks it against control by the motion sensor, extension operation, time programs and wireless control with the app and other JUNG HOME devices. The lock applies for an adjustable time or until the disabling function is deactivated again.

Additional settings for dimming / DALI inserts

Parameters	Setting options, default setting	Explanation
Switch-on delay	0 s (off) ... 240 min Default setting: Off	Switches on the load after a switch-on command, delayed by the value. Repeated switch-on commands during the current delay do not start the delay again. If the load has not yet been switched on due to the delay, the load remains switched off when a switch-off command arrives.
Switch-off delay	0 s (off) ... 240 min Default setting: Off	Switches off the load after a switch-off command, delayed by the value. A switch-off command during the current delay immediately switches the load off. If the load has not yet been switched off due to the delay when a switch-on command comes, then the load will remain on.
Switch-off warning	Off, On Default setting: Off	If the switch-off warning is switched on, the light is not immediately switched off after the run-on time (load) elapses. The light is first dimmed to minimum brightness within 30 seconds. The run-on time is thereby prolonged by approx. 30 seconds. If, during the switch-off warning, a movement is detected by a linked JUNG HOME sensor cover or the warning is switched on again by operating an extension or by a linked JUNG HOME operating cover, the run-on time will be restarted and the light switched back to the switch-on brightness.

Parameters	Setting options, default setting	Explanation
Run-on time (load)	0 s (off) ... 240 min Default setting: Off	Ensures that the load is switched off after the set run-on time expires instead of remaining permanently switched on after a switch-on command. If a movement is detected by a linked JUNG HOME sensor cover during the run-on time or the operating cover is switched on again by operating an extension or a linked JUNG HOME operating cover, the run-on time is restarted and the light remains on. The load can be switched off early during a running run-on time only if the "Manual switch-off during run-on time" parameter is set to "On" or a disabling function (continuous OFF) is started.
Manual switch-off during run-on time	Off, On Default setting: On	If this parameter is set to "On", it is possible to switch off the load manually during a current "run-on time (load)". For an automatic staircase lighting controlled by JUNG HOME operating and/or sensor covers, this parameter should be set to "Off" to prevent the light from being switched off by a second person.
Dimming range (min-max)	0 ... 100% Default setting: 5 ... 100%	Defines the dimming range. The minimum dimming value depends mostly on the lamps used and should be determined by trial and error.
Switch-on brightness	5 ... 100 % or last value Default setting: 100 %	If a value is entered, the light is switched to this brightness by a switch-on command. **Last value** When the light is switched on, it is switched to the brightness set last.
Colour temperature range (min-max) (only with DALI insert)	2,000 ... 10,000 K Default setting: 2,700 ... 6,500 K	Defines the adjustable colour temperature range. The minimum and maximum value depend on the colour temperature range of the lamp used and can be determined on the basis of its data sheet or by means of trial and error.

Parameters	Setting options, default setting	Explanation
Switch-on colour temperature (only with DALI insert)	2,000 ... 10,000 K Default setting: 2,700 K	If a value is entered, the light is switched to this colour temperature by a switch-on command. **Last value** When the light is switched on, it is switched to the colour temperature set last.
Warm dimming (only with DALI insert)	Off, On Default setting: Off	With the function switched on, the colour temperature is changed based on a stored curve when dimming the colour temperature. The colour temperature of the light is increased towards cool white when dimming up and reduced towards warm white when dimming down.
Hotel function**	Off, On Default setting: Off	This comfort function prevents it from becoming completely dark, for example in hotel corridors, when the run-on time expires or the light is switched off manually. With the function switched on, it switches between two brightness values instead of between on and off. When switched on, the light is switched to the switch-on brightness and, when switched off, to the brightness of the hotel function.
Hotel function brightness**	5 ... 100% Default setting: 20%	Defines the reduced brightness to which the light is switched if the "hotel function" is activated and the run-on time expires or the light is switched off manually. The entry in percent applies to the maximum brightness of the dimming range.
Night light function**	Off, On Default setting: Off	This convenience function, which can be used with a time program, can ensure that the lighting in the corridor or bathroom is switched on with less brightness at night to prevent unpleasant glaring. With the function switched on, the light is switched by a switch-on command to the set brightness of the night light function, not to the switch-on brightness.
Night light function brightness**	5 ... 100% Default setting: 20%	Defines the reduced switch-on brightness to which the light is switched with the "night light function" activated. The entry in percent applies to the maximum brightness of the dimming range.

Parameters	Setting options, default setting	Explanation
Behaviour after mains voltage return	Switched off, switched on, previous status, parametrised value Default setting: switched off	Behaviour of the load output after the mains voltage returns.
Disabling function (restraint)	Deactivated, continuously ON, continuously OFF, for fixed time ON/OFF Default setting: deactivated	The disabling function switches the load output to the desired status and blocks it against control by the motion sensor, extension operation, time programs and wireless control with the app and other JUNG HOME devices. The lock applies for an adjustable time or until the disabling function is deactivated again.

** Available by update in the future: You can find notes on updates and dates at www.jung.de/JUNGHOME

13 Troubleshooting

Device does not switch on

Cause 1: The ambient brightness is greater than the adjusted brightness threshold.

Increase the brightness value of the "brightness threshold" parameter or set it to day operation with the app.

Cause 2: Device does not detect any motions.

Check the detection field for obstacles.

Increase the sensitivity of all sensors in the app and increase it if necessary.

Switch on all sensors with the app.

Check the push-on cover.

Cause 3: "OFF for fixed time" or "continuously OFF" is switched on.

Deactivate the disabling function with the app.

Cause 4: A switch-on delay was set, which is delaying the switch-on process.

Check the "switch-on delay" parameter in the app of the device that controls the load.

Cause 5: The link between the motion sensor and the load to be controlled has been removed.

Re-establish the link in the app on the detailed motion detector view.

Device switches on without motions

Cause: Heat sources in the detection field, device constantly detects movements.

Remove the heat sources if possible.

Reduce sensitivity with the app.

Limit the detection field with the push-on cover or by deactivating sensors.

Device constantly switches on and off during motion

Cause: A run-on time that is too short has been set.

Check the "Run-on time (sensor)" parameter for the sensor cover and the "Run-on time (load)" of the device that controls the load in the app.

Device switches off despite motion

Cause 1: The device does not detect any motion.

Increase sensitivity with the app.

Cause 2: Detection field is limited because a sensor was switched off.

Switch on all sensors with the app.

Cause 3: Detection field is limited by push-on cover.

Check the push-on cover.

Cause 4: The ambient light is bright enough and the automatically calculated switch-off threshold has been exceeded.

Increase the brightness threshold in the app.

Device does not switch off

Cause 1: Heat sources in the detection field, device constantly detects movements.

Remove the heat sources if possible.

Reduce the sensitivity with the app and set the "operation location" if necessary to outdoors.

Limit the detection field with the push-on cover or by deactivating sensors.

Cause 2: On for fixed time or continuously ON is switched on.

Deactivate the disabling function in the app.

Cause 3: The run-on time was set to 0 s (off), resulting in the load being permanently switched on.

Check the "Run-on time (load)" parameter in the app of the device that controls the load.

Cause 4: A long switch-off delay was set, which is delaying the switch-off process.

Check the "Switch-off delay" parameter in the app at the device that is controlling the load.

14 Conformity

Albrecht Jung GmbH & Co. KG hereby declares that the radio system type art. no. BT17361.. meets the directive 2014/53/EU. You can find the full article number on the device. The complete text of the EU Declaration of Conformity is available under the Internet address: www.jung.de/ce

15 Warranty

The warranty is provided by the specialist trade in accordance with statutory requirements.

ALBRECHT JUNG GMBH & CO. KG
Volmestraße 1
58579 Schalksmühle
GERMANY

Telefon: +49 2355 806-0
Telefax: +49 2355 806-204
kundencenter@jung.de
www.jung.de