USB charger, 1 x type A + 1 x type C, white

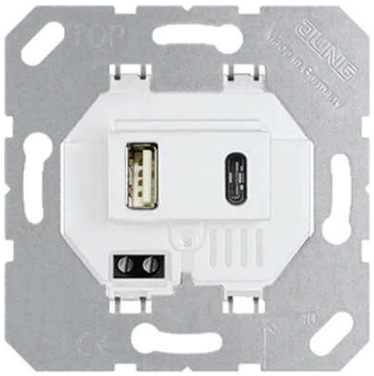

Reference number:	USB 15 CA WW
EAN/GTIN:	4011377176836
Color:	white

with 1 USB port type A and 1 USB port type C
screw fixing only, without claws

Intended use
- Battery charging station for mobile devices with USB connection
- Installation in flush box with dimensions according to DIN 49073

Product characteristics
- Simultaneous charging of 2 devices possible
- Installation into multiple frame with other devices possible
- Charging current: max. 3000 mA

Centre plates:
AS / A ranges: ref.-no. A 1569 USB ..
CD range: ref.-no. CD 569 T ..
LS range: ref.-no. .. 1969 USB ..
Hinged lids with symbol:
CD range: ref.-no. CD 590 KL USB ..
LS range: ref.-no. LS 990 BFKL USB .., .. 2990 KL USB ..

Technical data

Input voltage:	AC 100 ... 240 V ~ ± 10 %
Mains frequency:	50/60 Hz
Ambient temperature:	0 ... +35 °C
Storage/transport temperature:	-20 ... +70 °C
Stand-by power consumption at UIN = 230 V ~:	≤ 0.1 W
Connection mode:	screw terminals
Output voltage:	DC 5 V (± 5 %)
Output current	
AC 120 ... 240 V ~	max. 3000 mA
AC 90 ... 108 V ~	max. 2500 mA

ALBRECHT JUNG GMBH & CO. KG
Volmestraße 1
58579 Schalksmühle
Phone +49 (0) 23 55/80 60
E-Mail kundencenter@jung.de

Dimensions

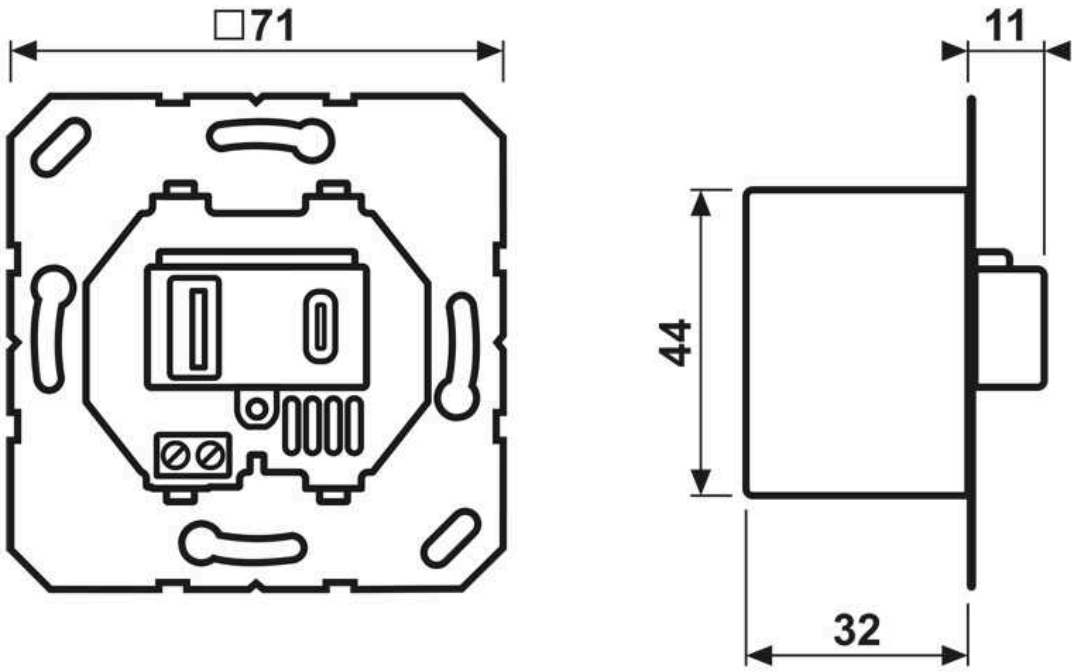

ALBRECHT JUNG GMBH & CO. KG
Volmestraße 1
58579 Schalksmühle

Phone +49 (0) 23 55/80 60
E-Mail kundencenter@jung.de

Assembly

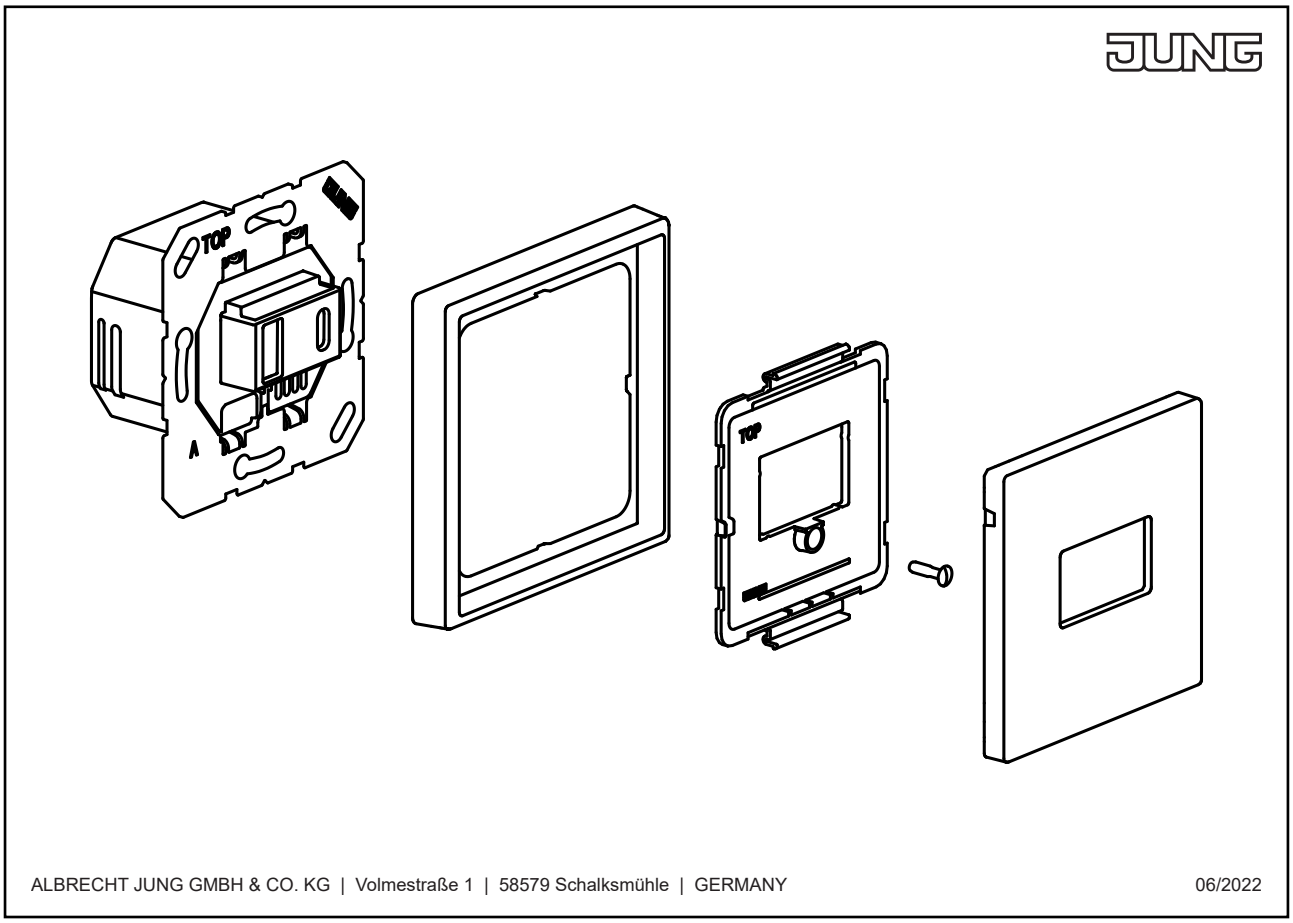

ALBRECHT JUNG GMBH & CO. KG | Volmestraße 1 | 58579 Schalksmühle | GERMANY 06/2022