Power supply insert, for LED pilot lights, AC 230 V ~



Reference number:	SV 539 LED
EAN/GTIN:	4011377992986

screw fixing only, without claws
The LED power supply insert is exclusively used for LED pilot light and LED info signs (ref.-no. ..539..).
The device is not dimmable.

Technical data

Rated voltage:	AC 230 ... 240 V ~
Mains frequency:	50 Hz
Ambient temperature:	0 ... +40 °C
Terminals:	L, N, L'
Protection class (with mounted cover):	II
Power consumption (with mounted cover):	typ. 2 x 5.4 VA / 2 x 1.0 W
Connection	screw terminals
Terminals for:	2 x 2.5 mm² or 1 x 4 mm²

ALBRECHT JUNG GMBH & CO. KG
Volmestraße 1
58579 Schalksmühle

Phone +49 (0) 23 55/80 60
E-Mail kundencenter@jung.de

Assembly

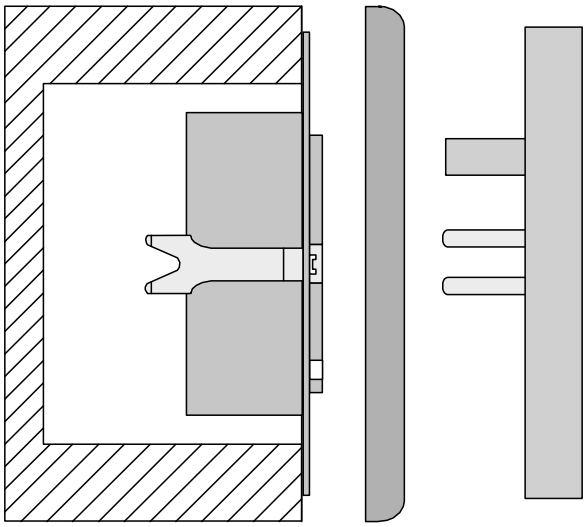

ALBRECHT JUNG GMBH & CO. KG | Volmestraße 1 | 58579 Schalksmühle | GERMANY 02/2023

ALBRECHT JUNG GMBH & CO. KG
Volmestraße 1
58579 Schalksmühle
Phone +49 (0) 23 55/80 60
E-Mail kundencenter@jung.de