Room thermostat (1-way NC contact) 230 V



Reference number:	RTR 230
EAN/GTIN:	4011377195417

for covers ref.-no.: .. 1749 ..

Intended use
- Electronic room thermostat for controlling electrothermal valve drives for 230 V ~ (e.g. ref.-no.: TSA 230 NC WW)
- Room temperature control in enclosed areas
- Installation in flush box with dimensions according to DIN 49073

Product characteristics
- Manually setting a comfort temperature
- Temperature limits can be set
- Internal temperature sensor
- Noiseless switching
- Controller output working method: pulse width modulation (PWM)
- Operation with valve type "normally closed"
- Valve protection function (once a week opening and closing of valve)

Accessories:
Accessories:
Thermal valve drive 230 Vref.-no.: TSA 230 NC WW

Technical data

Rated voltage:	AC 230 V ~
Mains frequency:	50/60 Hz
Connected load:	20 W
Stand-by power:	< 0.5 W
Temperature range:	approx. +5 ... +30 °C
Mounting height:	1.50 m
Number of valve drives:	1 ... 10
Ambient temperature:	-5 ... +45 °C
Storage/transport temperature:	-25 ... +70 °C

ALBRECHT JUNG GMBH & CO. KG
Volmestraße 1
58579 Schalksmühle
Phone +49 (0) 23 55/80 60
E-Mail kundencenter@jung.de

Assembly

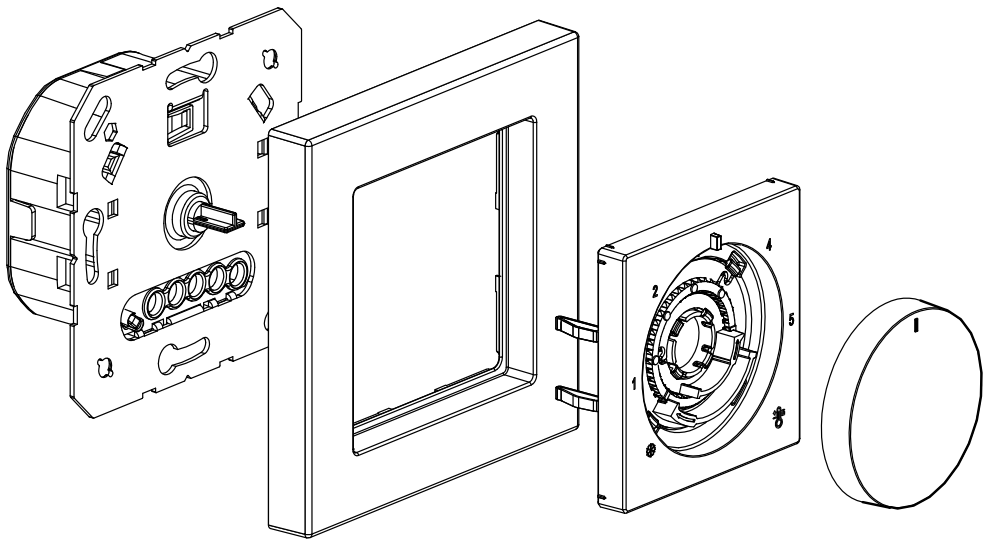

ALBRECHT JUNG GMBH & CO. KG | Volmestraße 1 | 58579 Schalksmühle | GERMANY 02/2023