Operating instructions

Room thermostat (1-way NC contact) 230 V
Art. no. RTR230



ALBRECHT JUNG GMBH & CO. KG
Volmestraße 1
58579 Schalksmühle
GERMANY

Telefon: +49 2355 806-0
Telefax: +49 2355 806-204
kundencenter@jung.de
www.jung.de

Product image non-binding

20.06.2025
82404823 J0082404823

Table of Contents

1 Safety instructions 3
2 Device components 3
3 Intended use 3
4 Product characteristics 4
5 Operation 4
6 Information for electrically skilled persons 4
7 Technical data 6
8 Warranty 7

1 Safety instructions

Electrical devices may be mounted and connected only by electrically skilled persons.

Serious injuries, fire or property damage are possible. Please read and follow the manual fully.

Danger of electric shock. Always disconnect before carrying out work on the device or load. In so doing, take all the circuit breakers into account, which support dangerous voltages to the device and or load.

These instructions are an integral part of the product, and must remain with the end customer.

2 Device components

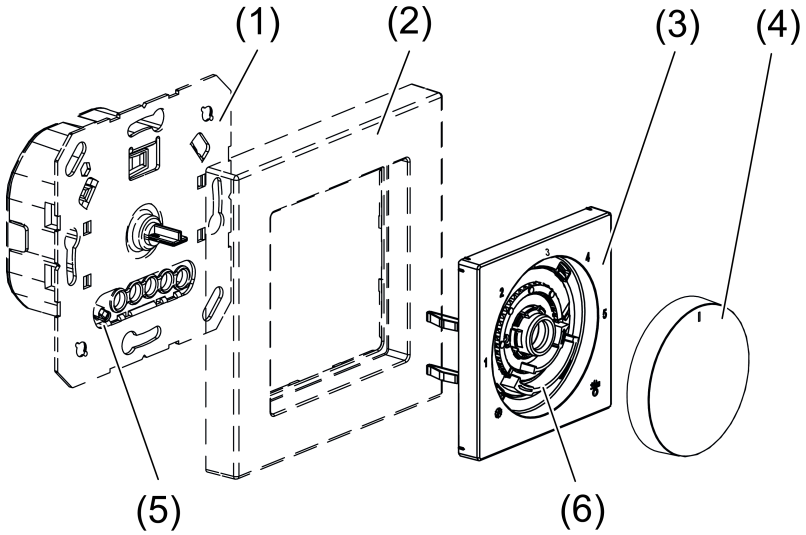

Figure 1: Device components

(1) Room temperature controller insert
(2) Frame
(3) Central plate
(4) Control knob
(5) Internal temperature sensor
(6) Adjustment rings for temperature limit

During renovation work, the temperature sensor (5) must not become dirty or be painted over.

3 Intended use

- Electronic room temperature controller for controlling electrothermal valve drives for 230 V~
- Control of the room temperature in closed rooms

– Mounting in appliance box with dimensions according to DIN 49073

4 Product characteristics

– Manually setting a comfort temperature
– Internal temperature sensor
– Silent switching
– Controller output working method: pulse width modulation (PWM)
– Operates with valve type "deenergised closed"
– Valve protection function (once a week opening and closing of valve)

5 Operation

Increasing or reducing the room temperature

■ Turn the control knob to the right or left.

In the middle position, the device regulates to approx. 20 °C target temperature. The room temperature reached depends on the installation location of the device and the ambient conditions. The lowest target temperature is approx. 5 °C and the highest target temperature is approx. 30 °C

6 Information for electrically skilled persons

Selecting a suitable installation location

– Recommended installation height: 1.50 m on interior walls.
– Do not mount the device near sources of interference, such as ovens, refrigerators, draughts (e.g. next to the door) or direct sunlight. This affects the temperature measurement of the internal temperature sensor.
– Do not mount the device within shelf walls or behind curtains and similar covers.
– Do not use the device in multiple combinations with heat-generating devices such as dimmers.

DANGER!

Mortal danger of electric shock.

Disconnect the device. Cover up live parts.

Connecting and fitting the device

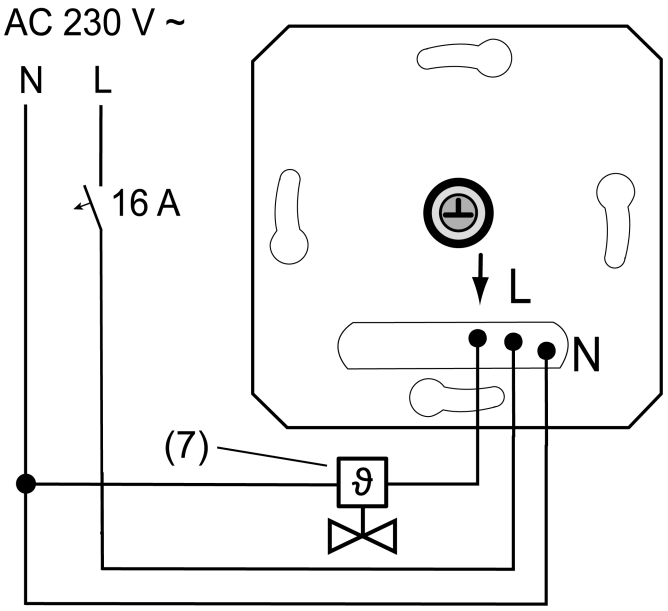

Figure 2: Connection example of the insert

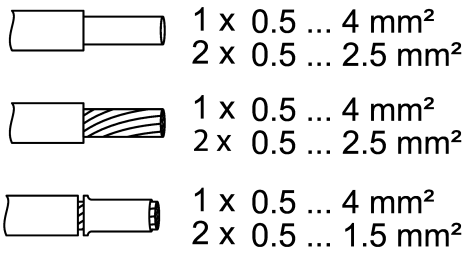

Figure 3: Clampable conductor cross-section

- Connect electrothermal valve drive (7) to insert (1) according to connection diagram (see figure 2). Observe the conductor cross-sections (see figure 3).

i Device defect due to incorrect or excessive load. Observe information on valve drives (technical data), check performance data if necessary.

- Fit device in appliance box; device connection terminals must be at the bottom.
- Attach the frame, central plate and control knob.
- Switch on mains voltage.

  The device calibrates itself within the first 90 minutes. Control deviations are possible during this period.

i When testing the function of the device, make sure that the output is activated with a delay of up to 30 seconds.

Setting the temperature limits

The room temperature controller has a setting range of 5 ... 30 °C. The adjustment rings on the central plate can be used to limit the temperature setting range.

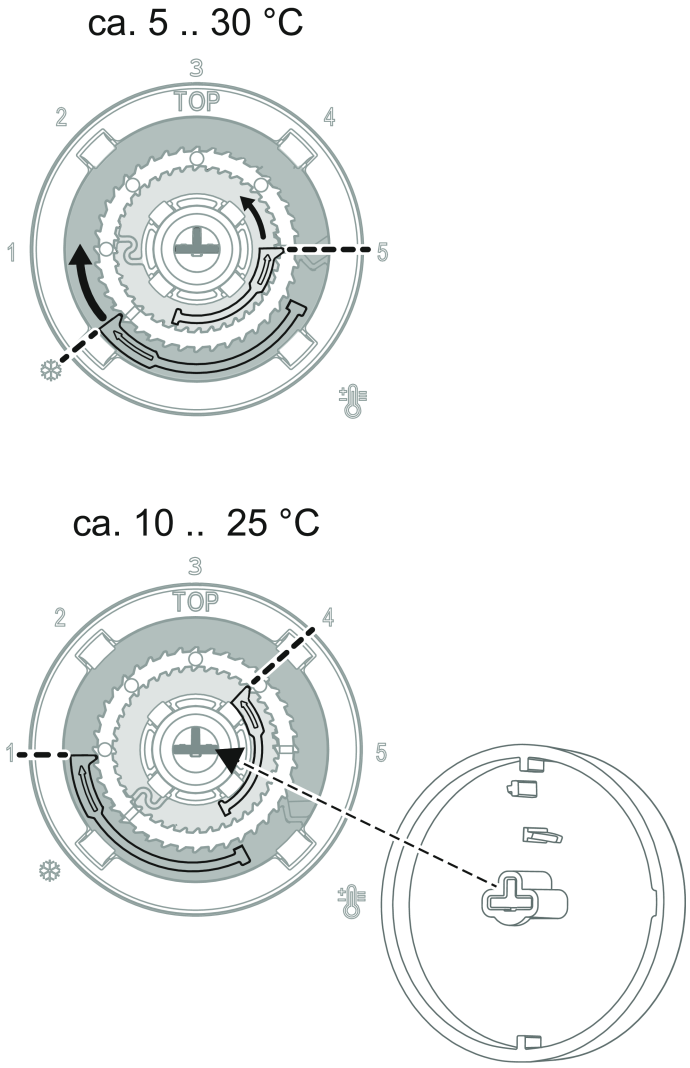

Figure 4: Setting the temperature limit (before/after)

- Pull the control knob off the central plate so that the adjustment rings are visible Bild.

i Pulling off is done by hand or with a suitable tool, e.g. vacuum lifting tool or key cap puller.

- Turn the large blue adjustment ring clockwise to the desired minimum temperature. Each notch corresponds to a change of about 1 °C.
- Turn the small red adjustment ring anticlockwise to the desired maximum temperature.

i The respective adjustment ring can only be turned in one direction. To return to the original setting, continue turning to the respective position.

- Replace the control knob, observing the coding (Fig. 4, bottom) of the control knob and rotary axle.

7 Technical data

Rated voltage	AC 230 V ~

Mains frequency	50 / 60 Hz
Standby power	Max. 0.5 W
Connected load	20 W
Sum of switch-on currents (100 ms)	Max. 5.5 A
Connection of thermal valve drives 230 V	
Quantity of item no.: TSA230NCWW	1 … 10
Ambient temperature	-5 ... +45 °C
Storage/transport temperature	-25 ... +70 °C
Controller class (EU 811/2013)	IV
Contribution to energy efficiency	2%

8 Warranty

The warranty is provided by the specialist trade in accordance with statutory requirements.

ALBRECHT JUNG GMBH & CO. KG
Volmestraße 1
58579 Schalksmühle
GERMANY

Telefon: +49 2355 806-0
Telefax: +49 2355 806-204
kundencenter@jung.de
www.jung.de