Operating instructions

Speed regulator
Art. no. 1735DS



ALBRECHT JUNG GMBH & CO. KG
Volmestraße 1
58579 Schalksmühle
GERMANY

Telefon: +49 2355 806-0
Telefax: +49 2355 806-204
kundencenter@jung.de
www.jung.de

17.08.2022
82404713 J0082404713

Table of Contents

1 Safety instructions 3
2 Intended use 3
3 Product characteristics 3
4 Operation 3
5 Information for electrically skilled persons 4
5.1 Mounting and electrical connection 4
5.2 Commissioning 5
6 Technical data 6
7 Troubleshooting 7
8 Warranty 7

1 Safety instructions



Electrical devices may only be mounted and connected by electrically skilled persons.

Serious injuries, fire or property damage possible. Please read and follow manual fully.

Danger of electric shock. Device is not suitable for disconnection from supply voltage because mains potential even is applied on the load when the device is switched off. Before carrying out work on the device or load, switch off all associated circuit breakers.

This manual is an integral part of the product, and must remain with the end customer.

2 Intended use

- Speed controller for controlling the speed of single-phase motors e.g. induction or shaded pole motors
- Operation with suitable cover
- Mounting in appliance box with dimensions according to DIN 49073

3 Product characteristics

Product characteristics

- Device is operating in leading edge phase control
- Operation without neutral conductor possible
- Switch-on via soft start to maximum speed
- Minimum speed can be saved permanently
- Connection of extensions possible
- Electronic short-circuit protection with permanent switch-off after approx. 100 ms
- Electronic over-temperature protection

4 Operation

Switching motor or adjusting speed

The operation on the main device and the 3-wire rotary extension is identical.

- Press the control button briefly: Motor switches on or off.
- Turn the control button to the right: Speed is increased.
- Turn the control button to the left: Speed is reduced.

Basic operation using 2-wire extension with LB Management push-button 1-gang or push-button

- Press briefly: Motor switches on or off.
- Press and hold: The speed is changed as long as the button is pressed, at maximum up to the respective end value.

Push-button: The adjustment direction is changed with each new long actuation.

5 Information for electrically skilled persons

5.1 Mounting and electrical connection

DANGER!

Mortal danger of electric shock.

Disconnect the device. Cover up live parts.

Mounting and electrical connection

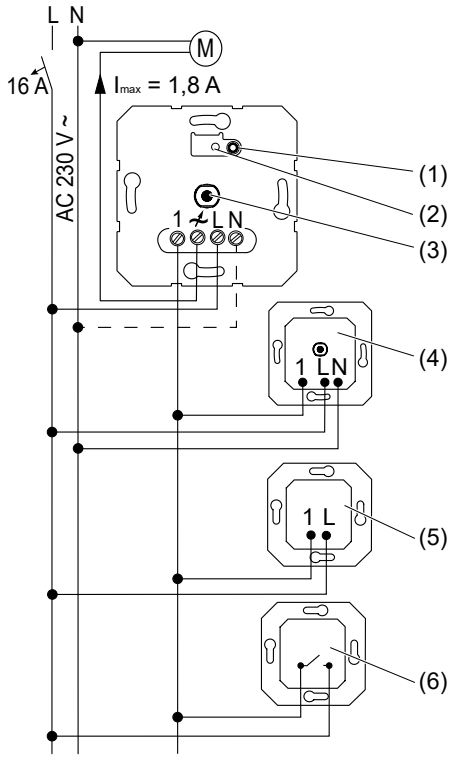

Image 1: Connection diagram with optional extensions

(1) Button **Test**
(2) LED display
(3) Rotary axle
(4) 3-wire rotary extension
(5) 2-wire extension
(6) Push-button, NO contact

The connection of a central extension is not possible.

Operation without neutral conductor possible.

Only connect illuminated push buttons if they have a separate N terminal.

Precondition: The maximum motor current (I_{max}) must not exceed the switching current of 1.8 A.

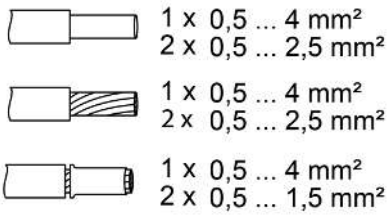

Image 2: Clampable conductor cross-section

- Connect the device according to the wiring diagram (see figure 1). Observe the clampable conductor cross-sections (see figure 2).
- Install the device in the appliance box.

The motor can be switched by briefly pressing the **Test** button (1).

- Set the minimum speed, see chapter Setting the minimum speed.
- Mount the cover.

Reset the overheating protection / short-circuit protection

If the electronic overheating or short-circuit protection has been triggered, disconnect the speed controller from the mains.

5.2 Commissioning

Setting the minimum speed

DANGER!

Mortal danger of electric shock.

The following work must be carried out under mains voltage and therefore may only be carried out by an electrician!

Only use insulated tools for the work! Cover up live parts in the working environment.

The minimum speed must be set so that the motor does not stop at the lowest speed setting.

Prerequisites: Speed controller is ready for operation and the central plate is not mounted.

- Press the button **Test** (1) until LED (2) lights up.
  The current operating state remains the same.

After 45 seconds without an actuation, the LED (2) goes out and the device exits the setting mode. The minimum speed remains unchanged.

- Briefly turn the rotary axle (3).
  LED (2) flashes. The speed controller sets the highest adjustable minimum speed.
- Turn the rotary axle (3) to the left or right to set the minimum speed. While doing so, take the motor follow-up into account.
- Save the setting: Press the **Test** button (1) for less than 1 second or do not press for 45 seconds.
  The LED (2) goes out. Speed controller switches off.

6 Technical data

Rated voltage	AC 230 V ~
Mains frequency	50 / 60 Hz
Standby power	< 0.5 W
Power loss	max. 4 W
Ambient temperature	-5 ... +45 °C
Switching current at 25 °C	60 mA ... 1.8 A
max. motor current (Imax)	1.8 A
Reduction of switching current	
per 5 °C in excess of 25 °C	-10%
when installed in wooden or dry construction walls	-15%
when installed in multiple combinations	-20%
Number of extension units	
3-wire rotary extension	10
2-wire, push-button	unlimited
Total line length	
Power cable	max. 100 m
Extension	max. 100 m

7 Troubleshooting

Motor stops at lowest speed setting

Cause: The set minimum speed is too low.

Increase the minimum speed.

Motor speed is too fast at lowest speed setting

Cause 1: The set minimum speed is too high.

Reduce the minimum speed.

Speed controller has switched off and cannot be switched on again.

Cause 1: overheating protection has tripped.

Reduce the connected load.

Disconnect the speed controller from the mains by switching off the circuit breaker.

Let the speed controller cool down for at least 15 minutes.

Switch on the circuit breaker and speed controller again.

Cause 2: short-circuit protection has tripped.

Disconnect the speed controller from the mains by switching off the circuit breaker.

Eliminate short-circuit.

Switch on the circuit breaker and speed controller again.

Short-circuit protection is not based on a conventional fuse, no metallic separation of the operational current.

8 Warranty

The warranty is provided in accordance with statutory requirements via the specialist trade.

ALBRECHT JUNG GMBH & CO. KG
Volmestraße 1
58579 Schalksmühle
GERMANY

Telefon: +49 2355 806-0
Telefax: +49 2355 806-204
kundencenter@jung.de
www.jung.de