Satellite insert 3-wire, power supply, without satellite input



Reference number:	1723 NE
EAN/GTIN:	4011377166950

for covers JUNG HOME ref.-no.: BT .. 17101 .., BT .. 17102 .., BT .. 17181 .., BT .. 17182 .., BT 17361 ..
for covers eNet ref.-no.: FM .. 1700 .., FM .. 1701 ..
for covers LB Management ref.-no.: .. 1700 .., .. 1702 .., .. 1750 D .., .. 17180 .., .. 17280 ..
for covers KNX RF ref.-no.: .. 1091 1ST RF .., .. 1092 1ST RF ..

Intended use

- Satellite operation of suitable inserts
- Satellite for extending the detection field of motion and presence detectors
- Central control of multiple main devices
- Operation with suitable cover
- Installation in flush box with dimensions according to DIN 49073
- Neutral conductor required

Technical data

Rated voltage:	AC 230 V ~
Mains frequency:	50/60 Hz
Ambient temperature:	-20 ... +45 °C
Connection	screw terminals
Total length of satellite cable:	max. 100 m

ALBRECHT JUNG GMBH & CO. KG
Volmestraße 1
58579 Schalksmühle

Phone +49 (0) 23 55/80 60
E-Mail kundencenter@jung.de

Assembly

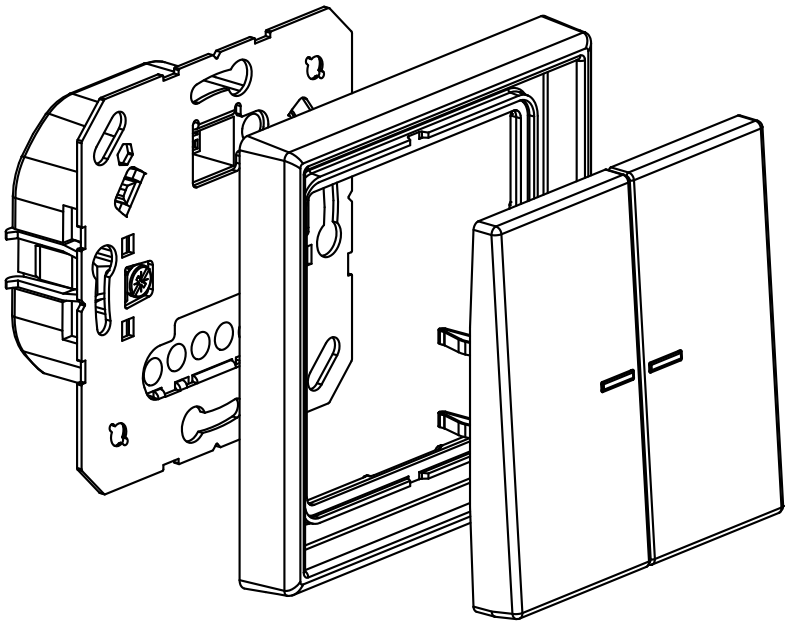

ALBRECHT JUNG GMBH & CO. KG | Volmestraße 1 | 58579 Schalksmühle | GERMANY 01/2023